ML50 Compact Logic Controller

AUTOMATION
MADE EASY & COMPACT

Honeywell Solutions for Machine Automation

Honeywell

Expansion

Analog Output I

Specification \ Model		MLF-DV04A	MLF-DC04A	Remark
		Voltage	Current	
Number of Channels		4 Channels	4 Channels	
Analog Range		DC 0~10V (Load resistance ≥ 2kΩ)	DC 4~20mA / DC 0~20 mA (Load resistance ≤ 510Ω)	
Analog range selection		-	Softmaster I/O parameter	
Digital data	Output Range	0 ~ 10V	4 ~ 20mA / 0 ~ 20mA	
	Unsigned Value	0 ~ 4000	0 ~ 4000	
	Singed Value	-2000 ~ 2000	-2000 ~ 2000	
	Precise value	0 ~ 1000	200 ~ 2000 / 0 ~ 2000	
	Percentile value	0 ~ 1000	0 ~ 1000	
	Data Format	Data format of digital input is set by user program or I/O parameter (Setting for each channel is available)		
Resolution		1/4000	1/4000	
		2.5mV	5μA	
Accuracy		±0.5% less		
Max. Conversion Speed		1.0msec / channel		
Max. Absolute input		DC ±15V	DC ±25mA	
Analog Input channels		4 channel / module		
Insulation		Photo-coupler insulation between I/O terminal and power supply	Photo-coupler insulation between I/O terminal and power supply	
Connection Terminal		11-point terminal block	11-point terminal block	
Occupied I/O points		Fixed type : 64 points		
Consumption Current	DC5V(Internal)	110mA	110mA	
	DC24V(External)	70mA	120mA	
Max Connectable modules		7sets (MLM series, "S" type), 10sets(MLC series, "H" type)		
Weight		64g	70g	

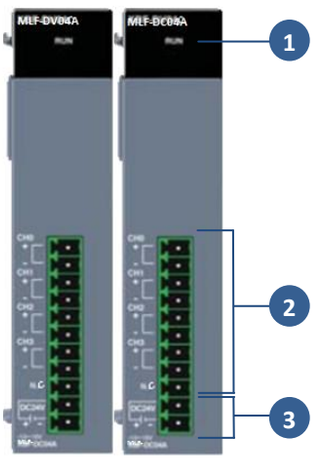

No	Name	Descriptions
1	RUN LED	►Indicates condition of modules • LED ON : Normal Condition • LED ON and OFF : Flickering • LED Off : Power Off or Module malfunction
2	Terminal Block	►External device connection
3	External power supply terminal	►External DC24V input

Wiring

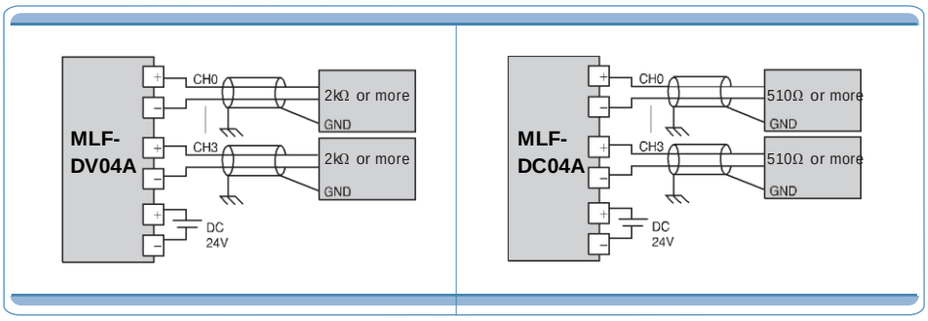

Honeywell

MasterLogic 50 Series **Product List**

Product List

Item	Model	Descriptions
Expansion I/O module	MLE-DC08A	8-point DC24V input
	MLE-DC16A	16-point DC24V input
	MLE-DC32A	32-point DC24V input
	MLE-RY08A	8-point Relay output
	MLE-RY16A	16-point Relay output
	MLE-TN08A	8-point TR(SINK) output
	MLE-TN16A	16-point TR(SINK) output
	MLE-TN32A	32-point TR(SINK) output
	MLE-DR16A	8-point DC24V input, 8-point Relay output
	MLE-TP08A	8-point Transistor (source) output
	MLE-TP16A	16-point Transistor (source) output
	MLE-TP32A	32-point Transistor (source) output
Special module (Analog IO)	MLF-AD04A	4-channel Analog input (Current/Voltage)
	MLF-AD04C	4-channel Analog input (Current/Voltage, resolution : 1/16000)
	MLF-AH04A	2-ch Analog input (Current/Voltage), 2-ch Analog output (Current/Voltage)
	MLF-DV04A	4-channel Analog output (Voltage)
	MLF-DC04A	4-channel Analog output (Current)
	MLF-RD04A	4-channel RTD input
	MLF-TC04S	4-channel Thermo-couple input(Isolation)
	MLF-AD08A	8-channel Analog input (Current/Voltage)
Communication module	MLL-C41A	Snet(RS422/485), 1channel
	MLL-C21A	Snet(RS232C), 1channel
	MLL-EMTA	Fast Ethernet (100Mbps), 1ch
	MLL-EIPT	Ethernet/IP, 2channel
	MLL-CMEA	CANopen(max 1000kbps, , Num of PDO : 32)
	MLL-CSEA	CANopen(max 1000kbps, , Num of PDO : 64)
	PMC-310S	Configuring Cable serial, PC(9pin)-PLC(6pin)
	USB-301A	Configuring Cable, USB
	TG7-1H40S	Smart Link Terminal Board 40P
Option Boards for “SU”, “E”	MLO-AD02A	2-channel Analog input (Current/Voltage)
	MLO-DA02A	2-channel Analog output
	MLO-AH02A	1-ch Analog input(I/V), 1ch Analog output(I/V)
	MLO-TC02A	2-channel Thermo-couple input(non-isolation)
	MLO-RD01A	1-channel RTD input
	MLL-RTCA	RTC, BAT for back-up