SIEMENS

SIWAREX® CS

Device Manual

Status 05/2008



SIWAREX CS

Weighing Electronics for ET 200S

Device Manual

Issue 05/2008

Warning and Safety Terms	
Contents	
Preface	**1**
Scope of Delivery	**2**
Product Overview	**3**
Hardware Configuration and Assembly	**4**
Weighing Functions	**5**
Commands	**6**
Messages and Diagnosis	**7**
Programming in SIMATIC STEP 7	**8**
Setting the Scale – SIWATOOL CS	**9**
Calibrating Applications	**10**
Accessories	**11**
Technical Data	**12**
Index	**13**
Abbreviations	**14**

1 Preface

1.1 Purpose of Manual

This manual contains all the information required to set up and operate the SIWAREX CS.

1.2 Basic Knowledge Required

To understand this manual, general knowledge in the area of SIMATIC automation technology is required. Knowledge of weighing technology is an advantage.

1.3 Scope of Manual

This manual applies to the SIWAREX CS module:

Type	Name	Order number	From product revision (Version)	
SIWAREX CS	SIWAREX Compact Scale	7MH4910-0AA01	**HW** **3**	**FW** **V.1.4**

Table 1-1 Scope of Manual

Note

This manual describes the SIWAREX CS weighing electronics as part of the SIMATIC ET 200S system and should be used as a supplement to the manual for the ET 200S.

Note

This manual contains a description of the module that is valid at the time of publication.

We reserve the right to supply new modules or newer versions of modules with product documentation containing current information about the module.

3 Product Overview

3.1 General

SIWAREX CS (Compact Scale) is a versatile and flexible weighing module, which can be used wherever static scales are to be used in the ET 200S automation system or a force measurement is necessary.

The SIWAREX CS function module (FM) can be used in SIMATIC ET 200S and takes full advantage of all the features of the modern automation system, including the integrated communication, the diagnostic system and the configuration tools.

The weighing functionality of the SIWAREX CS includes the non-automatic weighing instrument functions in accordance with OIML R-76.

Customer benefits:

SIWAREX CS is characterized by a number of crucial advantages:

- Standardized connection technology and integrated communication due to use in SIMATIC ET 200S
- Standardized configuration using SIMATIC Manager
- Use in a decentralized system concept through connection to PROFIBUS DP via ET 200S
- Weight or force measurement to a high resolution of 16 Bit
- High accuracy 0.05 %
- Calibration 2000 d
- High measuring rate of 50 Hz
- Monitoring of limit values
- Flexible adaptation to different requirements with SIMATIC control
- Easy adjustment of scale using the SIWATOOL CS program via the RS 232 interface
- Theoretical adjustment without adjustment weights
- Exchange of module possible without readjusting scales
- Use in Ex zone 2 / ATEX certification.
- Intrinsically safe load cell power supply for use in zone 1 areas with risk of explosion (SIWAREX IS option)
- Diagnostic functions

3.2 Area of Application

SIWAREX CS is the optimum solution wherever signals from DMS sensors or load cells are to be recorded. As a weighing electronics system, SIWAREX CS offers high accuracy and a calibration rating of 2000d. With a measurement time of 20 ms, the module can also be used as evaluation electronics for force measurement.

SIWAREX CS is optimally equipped for the following applications:

- o Filling level monitoring for silos and bunkers
- o Measurement of crane and cable loads, other force measurement
- o Load measurement for industrial elevators or mill trains
- o Weighing in areas with a risk of explosion (with SIWAREX IS Ex interface)
- o Belt tensioning measuring equipment

3.3 Structure

SIWAREX CS is a function module (FM) of SIMATIC ET 200S and can be plugged directly into a terminal module. The installation and cabling for the 30 mm wide module is minimal. The load cells, the power supply and the serial interfaces are connected via the terminal module with 16 connection points. Operation of the SIWAREX CS in SIMATIC guarantees complete integration of weighing technology into the automation system.

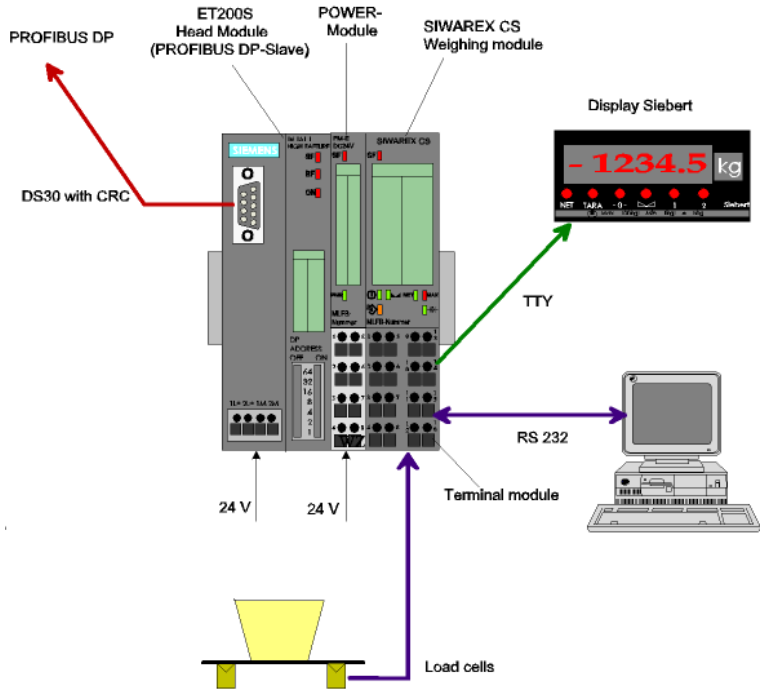

Figure 3-1 System Overview

3.4 Function

The primary task of the SIWAREX CS lies in the measurement of the current weight value. Integration into SIMATIC makes it possible to process the weight value directly in the PLC.

SIWAREX CS is pre-adjusted in the factory. This means that the scale can be adjusted to theoretical settings without using any adjustment weights and modules can be exchanged without readjusting the scale. Modules can be exchanged during operation in ET 200S.

The SIWAREX CS has two serial interfaces. A TTY interface is used for connecting remote digital displays. A PC for adjustment of the SIWAREX CS can be connected to the RS 232 interface.

The SIWAREX CS weighing module can also be used in areas with a risk of explosion (zone 2). An optional Ex interface SIWAREX IS gives load cells an intrinsically safe power supply for applications in zone 1. Further information about use for potentially explosive area you find in chapter *4.6*.

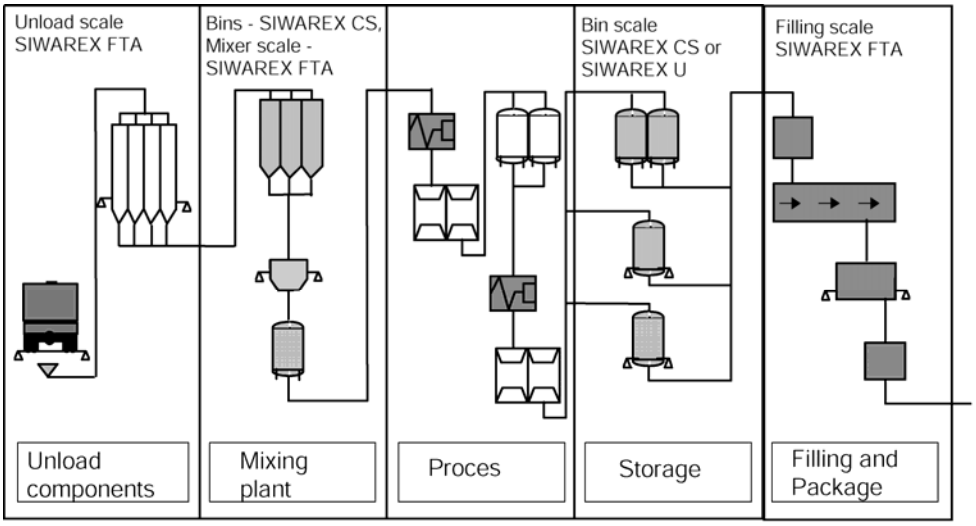

Figure 3-2 Areas of Application for SIWAREX in the Production Chain

3.5 System Integration in SIMATIC

SIWAREX CS is a component of SIMATIC ET 200S. This gives you complete freedom for configuration of the automation solution – including the weighing application. The optimum solution can be created for small, medium and large systems by selectively combining the SIMATIC components. The configuration package and the example applications for SIMATIC can help you to quickly and

12 Technical Data

12.1 Power Supply 24 V

An isolated function low voltage (in accordance with EN60204-1) is to be ensured by the system power supply.

Rated voltage	DC 24 V feed from PM-E power module
Static upper / lower limits	DC 20.4 V/28.8V
Dynamic upper / lower limits	DC 18.5 V/30.2 V
Non-periodic over-voltages	DC 35 V for 500 msec with a recovery time of 50 sec.
Max. current consumption	150 mA
Typical module power loss	5 W

Table 12-1 Data: Power Supply 24 V

12.2 Power Supply from ET 200S Backplane Bus

Power consumption from ET 200S backplane bus	Typical < 10 mA

Table 12-2 Data: Power Supply from ET 200S Backplane Bus

12.3 Load Cell Connection

EU type certification as non-automatic weighing instrument, class III	2000 d (pi = 0.4)
Precision with Ex-i interface	2000 d (pi = 0.4)
Error limit conforming to DIN1319-1 from measurement range end value at 20 °C ±10 K	≤ 0.05 %
Refresh rate internal / external	50 Hz
Internal resolution	65,535 parts
3 measuring ranges	0 to 1 mV/V 0 to 2 mV/V 0 to 4 mV/V
Max. distance to load cell (calibration)	1000 m (500 m)**
Max. distance between load cell and Ex-I interface in Ex area	150/500 m for gas group IIC 1000 m for gas group IIB (see SIWAREX IS device manual)
Lowest permitted input signal for a calibration value in calibrating operation	≥ 1.5 µV/e
Load cell power Voltage Maximum current	 Typical DC 6 V * 68 mA
Permitted load cell resistance without Ex-I interface with feed from SIWAREX CS	> 87 Ω < 4010 Ω
Permitted load cell resistance with Ex-i-Interface	> 87 Ω < 4010 Ω

Permitted load cell resistance without Ex-I interface with external feed (24V isolated) via terminals 9 and 13	> 40 Ω < 4010 Ω
Monitor for sensor inputs	Typical ≥ 5.4 V Hysteresis 0.2 V
Response time for sensor line monitor	≤ 1 s
Common mode rejection CMRR @50 Hz	Typical 120 dB
Low pass filter limit frequency	0.05...5 Hz
Measured value filtering for average value filter	2...255 values (20 ms)
Isolation	500 V (DC)

* Values apply to module output
**When using recommended cables (accessories)

Table 12-3 Data: Load Cell Connection

12.4 RS 232C Interface

Baud rate	9600 baud
Data bits	8
Parity	Even
Stop bits	1
Max. distance	15 m
Signal level	Conforms to EIA-RS232C
Isolation	500 V (DC)

Table 12-4 Data: RS 232C Interface

12.5 TTY Interface

Operating mode	Passive and unidirectional, i.e. transmitter only (TxD)
Baud rate	9600 baud
Data bits	8
Parity	Even
Stop bits	1
Max. line length (@ 20 mA)	125 m
Isolation	500 V (DC)
Transmitter voltage drop	< 2 V
Max. loop current	25 mA

Table 12-5 Data: TTY Interface

12.6 Dimensions and Weight

Dimensions W x H x D	30 x 80 x 50 mm
Weight	75 g

Table 12-6 Data: Dimensions and Weight

12.7 Ambient Conditions

The SIWAREX CS is designed to be used in SIMATIC ET 200S systems under the following conditions.
Usage conditions in accordance with IEC 60721:

Operation: IEC60721-3-3
Stationary use, weatherproof
Class 3M3, 3K3

Storage/Transport: IEC 60721-3-2
Transport packaged, no condensation
Class 2M2, 2K4

For use in extreme operating conditions (e.g. heavy dust, acidic moisture or gasses etc.), additional measures are to be taken such as B. Encapsulation.

Table 12-7 Data: Ambient Conditions

12.8 Mechanical Requirements and Data

Testing	Standards	Test values
Vibration In operation	IEC 60068-2-6	Testing Fc 10 ... 58 Hz: 0.075 mm movement 58 ...150 Hz: 9.8 m/s² 10 cycles per axis 1 octave / min.
Shock in operation	IEC 60068-2-27	Test Ea 150 m/s², Half sinus Duration: 11 ms Number: 3 per axis each in neg. and pos. direction
Vibration during transport	IEC 60068-2-6	Testing Fc 5 ... 9 Hz: 3.5 mm movement 9 ...500 Hz: 9.8 m/s² 10 cycles per axis 1 octave / min.
Shock during transport	IEC 60068-2-29	Testing Eb 250 m/s², Half sinus Duration: 6 ms Number: 1000 per axis each
Free fall	IEC 68000-2-32	Testing Ed Height of fall 1m

Table 12-8 Data: Mechanical Requirements