SIEMENS

SIMATIC NET

S7-200 - Industrial Ethernet CP 243-1

Operating Instructions

Preface

Application and properties 1

Installation and commissioning 2

Configuration 3

Programming 4

Diagnostics 5

Technical specifications 6

Certification 7

Access from and to the S7-200 A

Timeouts B

Sample program C

Training, Service & Support D

03/2012

C79000-G8976-C244-02

Preface

Validity of this manual

This document contains information on the following product:

CP 243-1
Order number: 6GK7243-1EX01-0XE0
Hardware product version 1
Firmware version V1.0

The device is a communications processor of the SIMATIC S7-200 for Industrial Ethernet and information technology.

You will also find the current version of the manual on the Internet pages of Siemens Automation Customer Support under the following entry ID:

42122427 (http://support.automation.siemens.com/WW/view/en/42122427)

Purpose of the manual

This manual supports when using the CP 243-1 communications processor. It provides you with information on how to communicate with this communications processor via Industrial Ethernet and how to use the Information Technology (IT) functions.

New in this issue

Revision of the manual.

Replaced documentation

This manual replaces the manual release 01/2010.

Requirements

To be able to understand how the CP 243-1 works, you should be familiar with this manual and the "SIMATIC S7-200 Automation System" system manual and have programming experience in STEP 7-Micro/WIN.

You will find the system manual on the Internet under the following entry ID: 1109582 (http://support.automation.siemens.com/WW/view/en/1109582)

You also require a basic understanding of TCP/IP, FTP, e-mail, HTML, Web browsers and Java.

Application and properties

1

1.1 Using the CP

Application

The CP 243-1 is a communications processor intended for operation in an S7-200 automation system. It allows the connection of the S7-200 to Industrial Ethernet (IE). The use of the CP 243-1 means that communication via Ethernet is also possible at the lower performance end of the S7 product family.

As a result, an S7-200 can be configured, programmed and diagnosed even at a distance using STEP 7 Micro/WIN 32 via Ethernet. Using a CP 243-1 also means that an S7-200 can communicate with another S7-200, an S7-300 or S7-400 controller via Ethernet. Communication with an OPC server is also possible.

The IT functions of the CP 243-1 form the basis for monitoring and, if necessary, also manipulating automation systems with a Web browser from a networked PC. In addition, diagnostics messages can also be e-mailed from a system. Using the IT functions, it is very easy to exchange entire files with other computer and controller systems.

Industrial Ethernet is the network for the process control level and the cell level of the SIMATIC NET open communication system. Physically, Industrial Ethernet is an electrical network based on shielded, coaxial lines, twisted pair cabling, and an optical network of fiber-optic conductors. Industrial Ethernet is defined by the international standard IEEE 802.3.

1.2 Compatibility with predecessor models

Predecessor models

The CP 243-1 (6GK7243-1EX01-0XE0) described here is the successor to the predecessor models CP 243-1 (6GK7243-1EX00-0XE0) and CP 243-1 IT (6GK7243-1GX00-0XE0) and is fully compatible with them.

1.3 Compatibility with S7-200 CPUs

The CP is compatible with the following CPUs and firmware versions of the CPU:

- CPU 222 CPU firmware version 1.2 or higher
- CPU 224 CPU firmware version 1.2 or higher
- CPU 226 CPU firmware version 1.2 or higher
- CPU 226XM CPU firmware version 1.2 or higher

A maximum of 2 expansion modules can be installed on the CPU 222.

Up to 7 expansion modules can be connected to CPUs 224, 226 and 226XM.

You will find information on the compatibility of the data type when accessing the S7-200/300/400 in the appendix Access from and to the S7-200 (Page 125).

NOTICE
Only one CP 243-1 may be connected to an S7-200 CPU. If additional CP 243-1 communications processors are connected, the S7-200 system may not function correctly.

1.4 Overview of the functions

The CP 243-1 provides the following functions:

- S7 communication
  - High-speed data communication via Industrial Ethernet. Communication is based on standard TCP/IP
  - Ethernet access via RJ-45 jack
  - Simple connection to an S7-200 system via the S7-200 bus
  - Permits a flexible and distributed automation structure
  - Basis for simple further processing and archiving of process data
  - Permits simultaneous communication with up to 8 S7 controllers
  - Provides a link to S7-OPC
  - Simple network administration
  - S7 communication services "XPUT/XGET" as client and server
  - S7 communication services "READ/WRITE" as server
  - A keepalive time can be configured for all TCP transport connections with active and passive partners
- IT communication
  - File system for permanent storage of Web and configuration files on the CP 243-1
  - SMTP client for sending e-mails. In addition to pure text information, embedded variables can also be transferred. The current value of such a variable obtained only when the e-mail is sent.
  - Configuration of up to 32 e-mails with up to 1024 characters each
  - FTP server for access to the file system of the CP 243-1
  - FTP client for exchanging data with an FTP server
  - Configuration of up to 32 FTP client operations
  - The FTP client function supports the READ, WRITE and DELETE commands.
  - Access by the FTP client to the FTP server of the CP 243-1
  - HTTP server for read and write access to process and status data of the S7-200 system via up to four Web browsers at one time
  - Ready-made HTML pages for diagnostics of the S7-200 system and for access to process variables
  - Sending a test e-mail via a ready-made HTML page
  - Storage of your own HTML pages and Java applets in the file system of the CP 243-1
  - Availability of Java applets and beans for development of user-defined HTML pages and Java applets

  - User administration for up to 8 users with user-specific privileges for access to files, status information and process variables

- Configuration:
  - Remote programming, configuration and diagnostics of an S7-200 system (for example program upload and download or status indications) via Industrial Ethernet and STEP 7 Micro/WIN 32.
  - Module replacement possible without having to program/configure the Ethernet functions again (Plug & Play). Since the configuration of the IT functions is stored on the CP 243-1, this must be downloaded to the module again when the CP 243-1 is replaced.
- Watchdog timer

  The CP 243-1 is equipped with a watchdog function. The watchdog starts each time the CP 243-1 starts up. If the watchdog monitoring is triggered, the CP 243-1 is automatically reset. This restarts the CP 243-1. During this time, the CP 243-1 reports a parity error to the S7-200 CPU. Handling such an error is described in the documentation of STEP 7 Micro/WIN 32.
- Can be addressed using preset MAC address (48-bit value)

  The MAC address is set for each CP 243-1 in the factory. The MAC address can be found under the upper front panel. An IP address can be assigned to the CP 243-1 using BOOTP/DHCP and the preset MAC address.

Note

The Telnet protocol is implemented on this device. This is used only for manufacturing purposes and is not released for productive applications.

Communications standards

The software of the CP 243-1 is compatible with the following standards:

- S7 XPUT/XGET and S7 READ/WRITE
- S7-200 I/O bus specification
- HTTP 1.0 to RFC 1945
- FTP to RFC 959
- SMTP to RFC 2821/2822 (only functions for sending e-mails)

The position in an S7-200 system at which a CP 243-1 can be operated depends on the firmware version of the S7-200 CPU, see also section Installation and electrical connections (Page 45).

1.5 S7 communication via Industrial Ethernet

1.5.1 Preliminary overview

S7 communication via Industrial Ethernet permits program-controlled communication using communication SFBs/FBs and configured S7 connections. The CP 243-1 supports S7 communication via Industrial Ethernet with the XPUT/XGET and READ/WRITE services. Up to 212 bytes of user data can generally be transmitted per request. If the CP 243-1 is operating as a server, up to 212/222 bytes of user data can be transferred in read requests (see Technical specifications (Page 119)).

The CP 243-1 supports a maximum of 8 S7 communications channels to clients or servers on one or more remote communications partner. The CP 243-1 works according to the client/server principle on each channel. Per channel only one request at a time is accepted, processed and answered with a positive or negative response. The CP 243-1 only accepts a new request after a response has been sent.

If the CP 243-1 receives several requests on a channel configured as a server, only the first request is processed. The subsequent requests are ignored until completion of the transaction, in other words, until a response is sent. The CP 243-1 has no channel-specific request administration and does not buffer requests.

Requirements for communication with a PC/PG

Just as previously, a PG/PC can access the S7-200 CPU via the PPI interface. This access is also possible via Ethernet using a CP 243-1. The following requirements must first be met:

- An Ethernet card is installed and configured on the PG/PC and an Ethernet and TCP/IP connection to the CP 243-1 exists (where necessary via routers, firewalls, etc.)
- STEP 7 Micro/WIN 32, version 3.2.3 or higher, is installed on the PG/PC.
- The CP 243-1 has a valid IP address. This address may be permanently specified in the configuration or obtained from a BOOTP/DHCP server.

At any one time, only one STEP 7 Micro/WIN 32 can communicate via a CP 243-1 with the S7-200 CPU. The Ethernet interface must be used when configuring the IT services.

1.5.2 Types of communication

The CP 243-1 has three types of S7 communication relationships that can be used individually or as a combination.

1. Link to STEP 7-Micro/WIN 32
2. Link to other remote components of the SIMATIC S7 family
3. Link to OPC-based applications on a PC/PG

1.5.3 Communications partners

Communications partners

- S7-200 CPU with CP 243-1
- S7-300 CPU with CP 343-1, CP 343-1 Lean, CP 343-1 IT / Advanced
- S7-400 CPU with CP 443-1, CP 443-1 IT / Advanced
- PG/PC with OPC server
- PG/PC with STEP 7 Micro/WIN 32

The STEP 7 HW Config program shows you the types of S7-300 CPUs and S7-400 CPUs that support the S7 protocol XPUT/XGET and can therefore communicate with the CP 243-1. When you select an S7-300 or S7-400 CPU in the catalog of HW Config, this CPU must support the "S7 communication" function.

Remember that the CP 243-1 does not support pure ISO connections. You should therefore check the supported protocols of the communications partner of the CP 243-1.

NOTICE
Only one CP 243-1 may be connected to an S7-200 CPU. If additional CP 243-1 communications processors are connected, the S7-200 system may not function correctly.

Note

If you require communication with an OPC server, remember that the CP 243-1 does not support automatic querying of the objects on the S7-200 (for example DBxx etc.).

A CP 243-1 can only communicate with an OPC server if this server supports the two S7 services READ and WRITE.

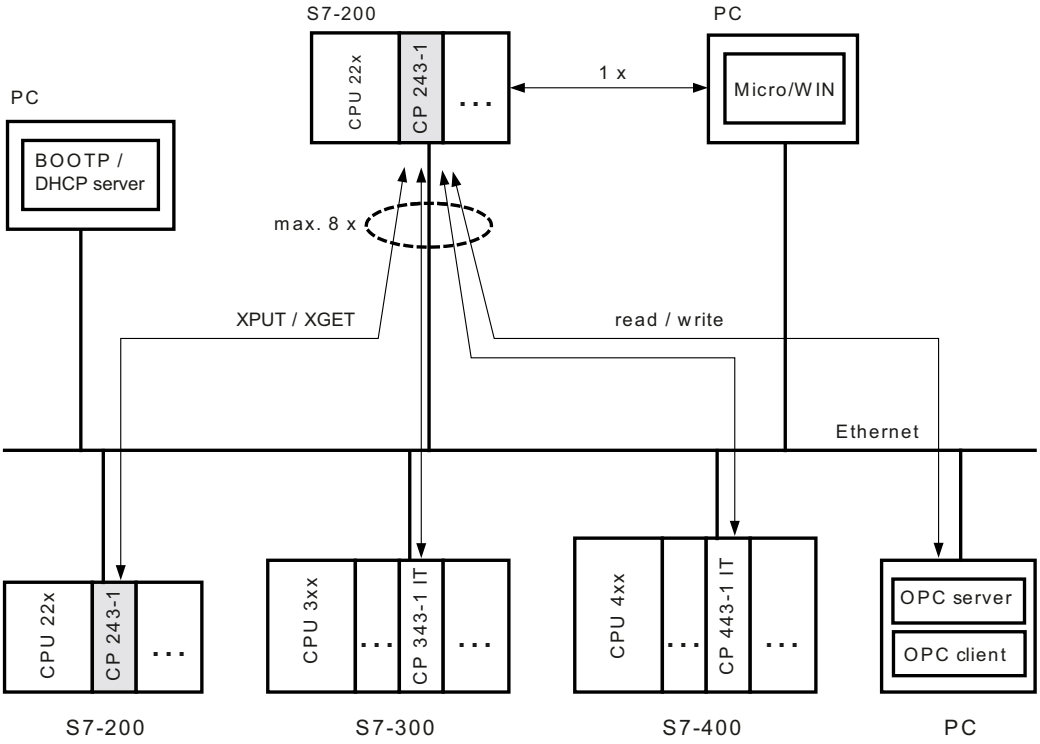

Figure 1-1 Communications partners

A CPU 22x with a CP 243-1 can communicate both with other S7-200, S7-300 and S7-400 systems and with an OPC server.

A maximum of 8 connections are possible in addition to a STEP 7 Micro/WIN connection.

Configuring and programming connections for S7 stations

To configure communication between an S7-200 and an S7-300, S7-400 or an OPC server, you will need both STEP 7 Micro/WIN 32, version 3.2.3 or higher, and STEP 7, version 5.1 with service pack 3 or higher (with NCM for Industrial Ethernet).

The S7-200 station is configured and programmed with STEP 7 Micro/WIN 32. You will need STEP 7 with NCM for Industrial Ethernet to configure and program the S7-300 or S7-400 or the OPC server.

Data exchange via Industrial Ethernet

10 and 100 Mbps networks are supported in full and half duplex. The CP 243-1 also supports the autonegotiation function for automatically negotiating the operating mode and the transmission speed to be used. The mode and the transmission speed can also be permanently specified by the user when configuring the CP 243-1. If the CP 243-1 does not have a valid configuration, it uses "autonegotiation" mode as default.

Note

Autonegotiation mode only works when all connected network components support this mode.

Industrial Ethernet and TCP/IP do not allow time-deterministic data flows. There is no way to know when a remote CPU will execute the requests. The responses of the remote CPU are asynchronous to the CPU cycle of the local S7-200 CPU. This is why TCP/IP-based communication is not ideally suitable for use in distributed applications with strict time requirements (for example control circuits, cyclic precisely timed sampling).

S7 communication

The XPUT and XGET S7 services are used to exchange data between two controllers. The CP 243-1 can be used both as client and as server.

Communication between a CP 243-1 and an OPC server running on a PC/PG is based on the READ and WRITE S7 services. In this case, the CP 243-1 always functions as the server. Other S7 services, for example the service for automatic querying of objects currently on an S7-200 (DBs, ...) are not supported here.

The following data types or data areas are supported by the CP 243-1:

- **CP 243-1 as client**

  Read and write access:

  – Data type is always BYTE

  – Only variables can be accessed on the local system.

  – Accessible memory areas on the partner system are inputs, outputs, bit memory and variables when an S7-200 is the partner.

  – Accessible memory areas on the partner system are inputs, outputs, bit memory and data areas when an S7-300 or an S7-400 is the partner.

- **CP 243-1 as server**

  Write access:

  – Data type is BOOL, BYTE, WORD or DWORD

  – The use of the data types CHAR, INT, DINT and REAL depends on the firmware version of the S7-200 CPU being used.

  – Accessible memory areas on the local system are inputs, outputs, variables, bit memory and status bits.

  Read access:

- Data type is BOOL, BYTE, WORD or DWORD
- The use of the data types CHAR, INT, DINT and REAL depends on the firmware version of the S7-200 CPU being used.
- Accessible memory areas on the local system are inputs, outputs, variables, bit memory, system area and status bits.

Note

When an S7-300 or S7-400 is acting as the server for a client running on an S7-200 system, the CP 243-1 expects that this server will always have a passive role. This means that, the S7-300 or S7-400 system is not allowed to send S7 requests to the S7-200 system.

Communication with STEP 7 Micro/WIN 32

With communication between a CP 243-1 and STEP 7 Micro/WIN 32, the CP 243-1 is always the server. STEP 7 Micro/WIN 32 always acts as the client.

S7 bus communication

All access to all data areas of the S7-200 CPU is always possible. Read and write access does not depend on the CPU mode (RUN, TERM or STOP).

1.6 IT communication

1.6.1 Preliminary overview

Preliminary overview

The CP 243-1 supports not only S7 communication via Industrial Ethernet but also a series of IT functions at the same time. These include data exchange via FTP, sending e-mails, and the option of permitting up to four Web browsers to access data and status information simultaneously on the S7-200 system.

Sending an e-mail or active file access using FTP is initiated by the S7-200 user program. Only one request can be active for each of these two functions at any one time. The user program cannot start another request until the CP 243-1 has positively or negatively acknowledged the currently active request.

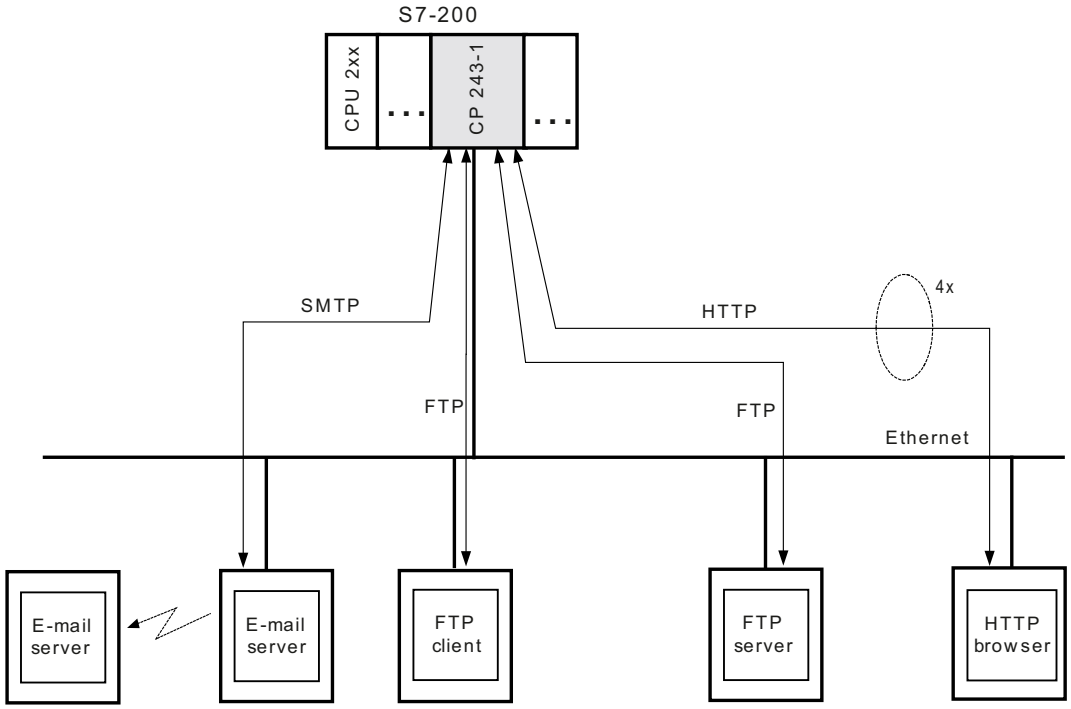

Figure 1-2 Overview of the IT functions

1.6.2 Types of communication

In addition to the S7 communication relations described in chapter Types of communication (Page 15), the CP 243-1 allows four types of IT communication relations that can be used individually or as a combination.

1. Communication with an e-mail server
2. Communication with an FTP client located on a remote system.
3. Communication with an FTP server. Such a server is typically located on a remote system. A link to the FTP server running on the CP 243-1 of the local S7-200 system is also possible.
4. Communication with up to four Web browsers running on remote systems

1.6.3 E-mails

How it works

The SMTP protocol controls the transfer of e-mails. An e-mail consists of one or two address fields, a subject field and a field for the actual text message.

The text message is made up of ASCII characters. The text may contain placeholders for variables that reference a data value within the local S7-200 system. When the e-mail is sent, the CP 243-1 reads each specified value from the local S7-200 CPU and inserts it in the desired format at the specified location in the message. With the CP 243-1, it is possible to send e-mails preconfigured by an S7-200 user program to an e-mail server specified during the configuration phase. The e-mail server then forwards the e-mail to the recipient specified in the address field of the e-mail.

The FTP server specified in the configuration must be located in the subnet of the CP 243-1 or must be accessible via a gateway. If this e-mail server cannot be accessed, the e-mail is sent to a substitute e-mail server that is also specified when the CP 243-1 is configured. If this substitute e-mail server is also not accessible, an error message is generated to this effect.

NOTICE
The CP 243-1 only monitors whether or not an e-mail could be delivered to the configured e-mail server. It cannot detect whether this e-mail was forwarded to or read by the specified recipient.

Note

Depending on the configuration, memory areas of the S7-200 CPU need to be read before an e-mail is sent. This means that resetting the S7-200 CPU or a power down may cause the e-mail transfer to be aborted.

This, in turn, means that no e-mail can be sent to indicate that the S7-200 CPU has been reset.

The CP 243-1 does not support the receipt of e-mails. The e-mails and the address parameters of the e-mail server are configured in STEP 7 Micro/WIN 32.

Note

To allow e-mails to be sent by the CP 243-1, make sure that it can access a functioning e-mail server.

One of the ways in which you can test whether or not a e-mail server is accessible is to use HTML page sendmail.htm, which ships with the CP 243-1 (see chapter HTTP server (Page 28)).

Configuration

The e-mails and the address parameters of the e-mail server are configured with the Internet wizard of STEP 7 Micro/WIN 32. The configuration data entered here is stored permanently in a file with the extension .edb in the file system of the CP 243-1. The data is transferred from the system on which the configuration was created with STEP 7 Micro/WIN 32 to the CP 243-1 via FTP.

Up to 32 e-mails can be configured. Each e-mail text can consist of up to 1024 characters.

These e-mails have the following structure:

- E-mail number:

  This number can be used by the S7-200 user program to reference a configured e-mail.

- Recipient address:

  The e-mail address of the recipient. This address must always be specified.

- Additional recipient address:

  The address of a recipient that will receive a copy of the e-mail. This address does not have to be specified.

- Subject:

  A short description of the e-mail. The subject must always be specified.

- E-mail text incl. placeholders and formatting characters:

  The actual information to be transferred is located here.

Each address field may only contain one recipient address. If an e-mail needs to be sent to several recipients, a distribution list must be set up on the e-mail server and this list must be specified as the e-mail recipient.

In addition to the control characters for the placeholders of data values, the following formatting characters are supported in the e-mail text:

- \nline feed
- \ttab

Note

The maximum length of the e-mail text of 1024 characters relates to the actual message text including all embedded placeholders and all formatting characters ("\n" and "\t").

If the maximum permitted length of 1024 characters is exceeded when the placeholders are replaced by values, the e-mail text is truncated after 1024 characters and an error message to this effect is returned. The truncated e-mail is nevertheless sent.

Conversion procedures such as MIME or UUENCODE are not supported. It is also not possible to add attachments such as files to e-mails.

The e-mail function of the CP 243-1 can always be enabled or disabled in the configuration.

Communications partners

In addition to conventional PCs, it is possible in principle to specify any terminal with e-mail capability as the e-mail recipient (for example cell phones or FAX machines).

Performance/constraints

Sending of e-mails is subordinate to S7 communication.

⚠ WARNING

Protection against transient voltage surges

Take measures to prevent transient voltage surges of more than 40% of the rated voltage. This is the case if you only operate devices with SELV (safety extra-low voltage).

2.2 Installation and electrical connections

Installation

You can install the devices of the S7-200 series either in a control panel or on a DIN rail. You can arrange the modules both horizontally and vertically. The S7-200 CPU and the expansion modules are designed for natural heat dissipation by convection. For this reason, leave a clearance of at least 25 mm above and below the devices so that the heat is free to escape. Long operating times at maximum ambient temperatures and maximum loads will shorten the lifespan of the electrical components of the device.

When using firmware version on the CPU of 1.2 or higher, the CP 243-1 can be installed in any one of 7 positions in an S7-200 system.

Wiring

⚠ WARNING

If you attempt to install or remove the CP 243-1 or other devices while they are on, you may receive an electric shock or the devices may not work properly.

If the power for the CP 243-1 and all connected devices is not switched off while the devices are being installed/removed, this may cause injury and/or property damage.

Take all necessary safety precautions and make sure that the power for the S7-200 and the CP 243-1 is turned off before you begin wiring.

General guidelines

Below, you will find some general guidelines for wiring your programmable controller:

- Make sure that you comply with all valid and binding standards when you wire up your CP 243-1. When installing and operating the device, keep to the relevant national and regional regulations. Ask your local authorities for the standards and regulations that apply to your specific situation.
- Only wire up the S7-200 CPU and the CP 243-1 when the power is turned off!

Space requirements for installation

When installing your module, keep to the following guidelines:

- The CP 243-1 is designed for natural heat dissipation by convection. For this reason, leave a clearance of at least 25 mm above and below the device to allow heat to escape. Long operating times at maximum ambient temperatures and maximum loads will shorten the lifespan of the electrical components of the device.
- When the rack installed vertically, the maximum permissible ambient temperature drops by 10 °C. The CP 243-1 must be positioned above the CPU. If you are using a vertical standard DIN rail, you should use standard DIN rail stoppers to prevent the module from slipping.
- The installation depth is 75 mm.

Note

Set up your devices so that there is still enough space to wire the inputs and outputs and to connect the communication cables.

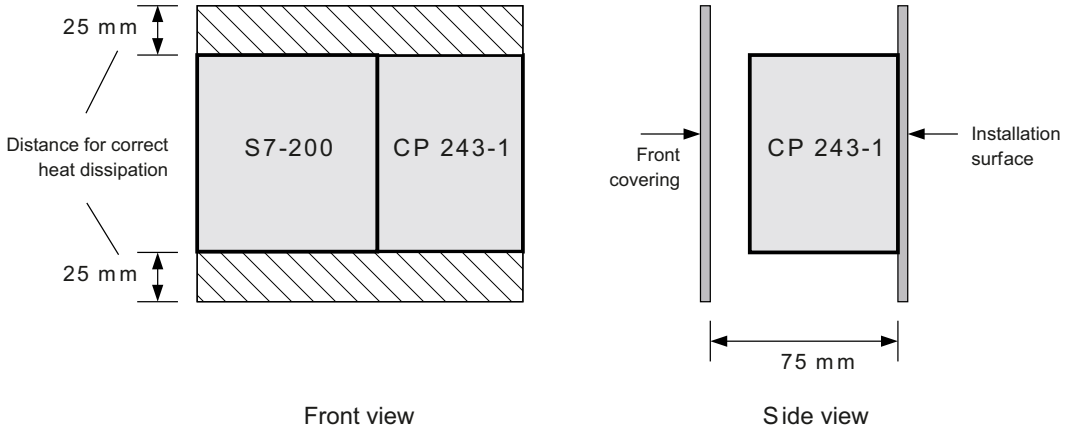

Figure 2-1 Space requirements for installation

2.6 Installation on a standard DIN rail

Installation on a standard DIN rail

1. Open the catch and hang the CP 243-1 on the DIN rail to the right of or above the CPU.
2. Close the catch to secure the CP 243-1 to the rail. Make sure that the catch snaps in correctly and that the device is firmly secured to the rail.

   Note

   In environments in which strong vibration occurs or when the devices are installed vertically, it may be necessary to use standard DIN rail stoppers to keep the devices from slipping down the DIN rail.

3. Insert the ribbon cable of the CP 243-1 in the connector under the front cover of the adjacent module or the S7-200 CPU. The shape of the plug prevents it from being incorrectly inserted.
4. Connect the grounding terminal:
5. Connect the grounding terminal of the CP 243-1 with the nearest available ground to obtain the highest possible interference immunity. We recommend that you connect all grounding terminals individually. Use wires with a cross section of 1.5 mm^2.
6. Connect the power supply.
7. Connect the Ethernet cable.

   The transmission medium is a 2 x 2-wire, twisted pair, shielded cable with a characteristic impedance of 100 ohms. The transmission properties of this cable must meet category 5 requirements (Cat5 cable). The maximum length of the connection between an end device and network component (link segment) is limited to 100 m with the components defined in IEEE802.3.

   The RJ-45 plug on the CP 243-1 is shielded so that, in combination with a shielded Ethernet cable, a continuous cable shield is created that ensures interference-free Ethernet transmission. The shield of the RJ-45 plug is connected via the grounding terminal of the CP 243-1.

   We recommend that you shield and ground the Ethernet connection as described in the document "SIMATIC NET Twisted Pair and Fiber-Optic Networks".

Installation is now complete.

Note

Keep the front cover of the CP 243-1 closed during operation.

During installation, make sure that the upper and lower ventilation slits of the module are not obstructed and good ventilation is possible.

2.7 Replacing a module

When the CP 243-1 (6GK7243-1EX01-0XE0) module is replaced, no new programming is required on the S7 communication side since the configuration data and the user program are stored retentively on the S7-200 CPU. The CP 243-1 must be programmed again for the IT functions since the configuration files for the IT services are stored in the file system of the CP 243-1.

2.8 Uninstalling the CP 243-1

⚠ WARNING

If you attempt to install or remove the CP 243-1 or other devices while they are on, you may receive an electric shock or the devices may not work properly.

If the power for the CP 243-1 and all connected devices is not switched off while the devices are being installed/removed, this may cause injury and/or property damage.

Take all necessary safety precautions and make sure that the power is turned off before you install or remove a device.

Follow the steps below to remove the CP 243-1 or any other expansion module of the S7-200:

1. Turn off the power supply of the S7-200 CPU, the CP 243-1 and all expansion modules.
2. Disconnect all cables and wires from the device you want to remove.
3. Open the front cover and disconnect the ribbon cable from the adjacent modules.
4. Remove the screws or open the catch and remove the module from the panel or the DIN rail.

Configuration 3

3.1 Configuration options

Using the CP 243-1, an S7-200 system can communicate via the S7 protocol with another S7-200 system or an S7-300 / S7-400 or an OPC-based system. Using the IT protocols SMTP, FTP and HTTP, communication is also possible with any computer system that supports these protocols.

There are two ways to configure one of these communication modes for an S7-200 system:

- Configuration using STEP 7 Micro/WIN 32, version 3.2.3 or higher
- Configuration by an S7-200 user program

The configuration data for the IT services is located in the file system of the CP 243-1. This is read during startup and then monitored continuously for changes. This means that every change to this data during ongoing operation is immediately adopted by CP 243-1. All other configuration data is stored in the data block of the S7-200 CPU. From there, this data is read once each time the CP 243-1 restarts.

NOTICE
A change to the configuration stored on the S7-200 CPU by an S7-200 user program is only possible when the CRC mechanism is disabled. After the CRC check is disabled, the CP 243-1 is no longer able to check the configuration data for consistency in terms of desired or undesired changes, so there is no guarantee that the CP or the components connected to the network will function correctly.

NOTICE
To ensure that the configuration data of the CP 243-1 stored on the S7-200 CPU will also be retained if a power failure occurs, this data must be stored in a retentive memory area on the S7-200 CPU. As default in an S7-200 system, the entire data block is defined as retentive. However, a reconfiguration could change this default setting on your S7-200 system.

Changes to the configuration data stored on the S7-200 CPU do not take effect until the next CP 243-1 restart. When STEP 7 Micro/WIN 32 is used for new/modified configuration of the CP 243-1, this automatically triggers a restart of the CP 243-1 as soon as the mode changes from STOP to RUN. If, on the other hand, the CP 243-1 is configured directly by the S7-200 user program, this configuration can be activated by the user program by calling the subroutine "ETHx_CFG". Calling this subroutine also triggers a restart on the CP 243-1.

The TCP/IP address parameters (IP address, subnet mask, IP address of a gateway) can be specified during configuration in one of two ways. They can be specified permanently or dynamically (the CP 243-1 obtains the TCP/IP address parameters from a BOOTP/DHCP server during startup).

The configuration data stored in the memory of the S7-200 CPU can be downloaded to the S7-200 CPU via the PPI interface. If the CP 243-1 already has an IP address, this configuration data can also be downloaded to the S7-200 CPU using TCP/IP and the Ethernet interface of the CP 243-1. The CP 243-1 must already have an IP address before the configuration data of the IT services can be downloaded to the CP 243-1. If you want an S7-200 system to communicate via a CP 243-1 with an S7-300, an S7-400 or an OPC-based system, use STEP 7 with at least version 5.1 and service pack 3 or higher (with NCM S7 for Industrial Ethernet) for configuration.

Note

After startup, the CP 243-1 may automatically change the configured gateway due to special network-based services ("ICMPRedirect"). After approximately 30 seconds, however, the CP 243-1 returns to the originally configured gateway. This means that the gateway actually used by the CP 243-1 may sometimes differ from the one in the configuration.

You can change the gateway currently used by the CP 243-1 either using the diagnostics window for the CP 243-1 in STEP 7 Micro/WIN 32 or a user program that reads from the memory area of the S7-200 CPU in which the NPB data block is stored (see chapter Structure of the network parameter block (NPB) (Page 72)).

3.2 Value ranges of the configuration data

3.2.1 IP addresses

The IP addresses that need to be specified at various points in the configuration must comply with the general conventions governing the validity of IP addresses.

According to this convention, the following IP addresses have a special significance:

Loopback	127.0.0.0 - 127.255.255.255
Class D addresses	224.0.0.0 - 239.255.255.255
Class E addresses	240.0.0.0 - 247.255.255.255
Broadcast addresses	for example 255.255.255.255

The CP 243-1 does not accept these addresses. The only exception is the loopback address 127.0.0.1 that can be used during configuration of the FTP client service. This causes data to be transferred between the memory of the local S7-200 CPU and the file system of the local CP 243-1 when the relevant function is called.

3.2.2 Subnet mask

If a subnet mask is specified in the configuration, its structure must comply with the general conventions governing the validity of subnet masks.

Remember that the validity of an IP address and a related subnet mask are dependent on each other.

3.2.3 TSAPs

TSAPs consist of 2 bytes. The first byte specifies the connection. The second byte is created from the rack number and the slot of the communications module. The following value ranges apply to the first byte.

Range of values for the local TSAP	16#02, 16#10 - 16#FE
Range of values for the remote TSAP	16#02, 16#03, 16#10 - 16#FE

The CP 243-1 does not check the value of the second byte.

3.2.4 Ports

Each standard protocol from the TCP/IP protocol family (for example HTTP, FTP or SMTP) is assigned to a separate fixed port number with which a related communication service can usually be accessed in a TCP/IP network. These permanently assigned port numbers are called "well-known" port numbers since they were specified worldwide in the definition of the protocol. Standard protocols usually use port numbers between 0 and 1024. Port numbers higher than 1024 are not fixed and can be assigned by the user programs as required.

Thanks to modern protection mechanisms in TCP/IP networks (for example firewalls), the ports usually used by standard protocols are rerouted to other ports. To allow the CP 243-1 to be able to communicate with external SMTP servers even in such environments, you can explicitly specify the port via which such a server can be accessed when you configure the e-mail service with the Internet wizard of STEP 7 Micro/WIN 32. Standard SMTP servers can be accessed with port 25.

3.2.5 E-mail tags

An e-mail consists of one or two address fields, a field for the subject and a field for the text message. The text message is made up of ASCII characters. In addition to the two control characters \n and \t, the text can also contain placeholders defining an embedded data value. When an e-mail is sent, the CP 243-1 reads the current value of such a placeholder from the local S7-200 CPU, formats it and inserts it in the message.

Such placeholders use the following syntax:

%address:places_before_decimal_point.places_after_decimal_pointFormat%

Technical specifications	
Design, dimensions and weight	
Module format	S7-200 expansion module
Degree of protection	IP20
Weight	150 g
Dimensions (W x H x D)	71.2 x 80 x 62 mm
Installation options	• Mounting on DIN rails • Control panel installation
Performance data and functions	
Max. number of connections	• Max. 8 S7 connections (XPUT/XGET or READ/WRITE) + • 1 connection to STEP 7 Micro/WIN 32
Max. number of IT connections	• 1 connection each for: – FTP server – FTP client – E-mail client • 4 HTTP connections
Startup time or restart time after a reset	approx. 10 seconds
Amount of user data	• As client: With XPUT/XGET: up to 212 bytes • As server: – With XGET or READ: up to 222 bytes – With XPUT or WRITE: up to 212 bytes
Max. e-mail size	1024 characters
File system	• Max. path length incl. file and drive names: 254 characters • Max. length of a file name: 99 characters • Max. nesting depth of the directories: 49
Server ports used	• HTTP: 80 • FTP command channel: 21 • FTP data channel for FTP server: 3100 - 3199 • S7 connection establishment: 102