SIEMENS

SIMATIC

ET 200pro distributed I/O system

Operating Instructions

Preface

Description 1

Application Planning 2

Mounting 3

Connection 4

Configuring 5

Commissioning 6

Maintenance and service 7

Functions 8

Alarm, error and system messages 9

General technical data 10

Connection modules 11

Interface modules 12

Power modules 13

Digital electronic modules 14

Analog electronic modules 15

Pneumatic interface modules 16

Appendix A

03/2013

A5E00335544-08

15 Analog electronic modules 383
15.1 Analog electronic module 4 AI U High Feature (6ES7144-4FF00-0AB0) 383
15.2 Analog electronic module 4 AI I High Feature (6ES7144-4GF00-0AB0) 389
15.3 Analog electronic module 4 AI RTD High Feature (6ES7144-4JF00-0AB0) 395
15.4 4 AI TC High Feature analog electronic module (6ES7144-4PF00-0AB0) 401
15.5 Analog electronic module 4 AO U High Feature (6ES7145-4FF00-0AB0) 408
15.6 Analog electronic module 4 AO I High Feature (6ES7145-4GF00-0AB0) 414
15.7 Parameter overview for analog electronic modules 419
15.8 Overview of parameters of the analog electronic modules 427
15.9 Dynamic reference temperature for the 4 AI TC High Feature electronic module 433
15.10 Analog value representation for measuring ranges with SIMATIC S7 437
15.11 Measuring ranges of the analog input modules in S7 format 438
15.12 Output ranges of the analog output modules in S7 format 447
15.13 Influence of the range of values 449
16 Pneumatic interface modules 451
16.1 Pneumatic interface module 16 DO DC 24V CPV10 (6ES7148-4EA00-0AA0) 451
16.2 Pneumatic interface module 16 DO DC 24V CPV14 (6ES7148-4EB00-0AA0) 455
16.3 Overview of parameters of pneumatic interface module 458
A Appendix 459
A.1 Order numbers 459
A.1.1 Module order numbers 459
A.1.2 Order numbers for accessories 462
A.1.3 Order numbers for manuals 476
A.2 Dimension drawings 478
A.2.1 Interface module with connection module for PROFIBUS DP 478
A.2.2 Interface module with connection module for PROFINET IO 481
A.2.3 Electronic module with connection module 483
A.2.4 PM-E power module with connection module 486
A.2.5 PM-O PP outgoing module with connection module 492
A.2.6 Pneumatic interface module with FESTO valve terminal 493
A.2.7 Terminating module 497
A.3 IO address space 498
A.3.1 Digital input modules 498
A.3.2 Digital output module 500
A.3.3 Digital input/output module 502
A.3.4 Analog input module 504
A.3.5 Analog output module 504
A.3.6 Pneumatic interface module 505
A.4 Response times 506
A.4.1 Response times between the DP master and ET 200pro 506
A.4.2 DP master response times 506

15.6 Analog electronic module 4 AO I High Feature (6ES7145-4GF00-0AB0)

Order number

6ES7145-4GF00-0AB0

Properties

- 4 current outputs
- Output ranges:

  ± 20 mA, resolution 15 bit + sign

  4 to 20 mA, resolution 14 bit

  0V to 20 mA, resolution 15 bit
- Outputs are electrically isolated from encoder voltage supply 1L+ and load voltage supply 2L+
- Diagnostics for encoder supply short-circuit to M per module
- Diagnostics for wire break per channel
- Output of substitute value

Note

Incorrect intermediate values may be generated at the output when you switch the 1L+ electronics/encoder supply on and off.

Pin assignment of connection module CM IO 4 x M12

The table below lists the terminal assignment of 4 AO I High Feature for connection module CM IO 4 x M12.

View of circular connector	Terminal	Assignment X1 to X4*
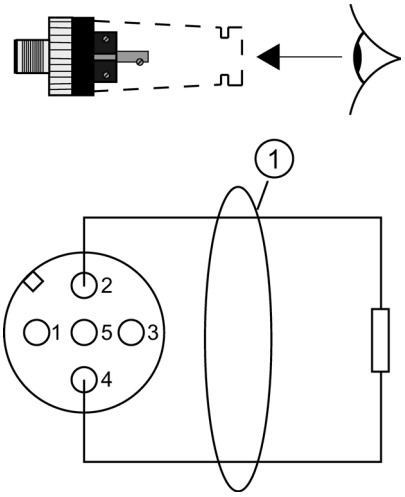	1	24 V actuator supply 1L+
	2	Output signal QI_0+: Connector X1 Output signal QI_1+: Connector X2 Output signal QI_2+: Connector X3 Output signal QI_3+: Connector X4
	3	Actuator supply ground 1M
	4	Output signal QI_0-: Connector X1 Output signal QI_1-: Connector X2 Output signal QI_2-: Connector X3 Output signal QI_3-: Connector X4
	5	Functional earth (FE)
① Shielded copper cables * Please note the changed pin assignment for the ET 200X.		

Block diagram

The figure below shows the block diagram of 4 AO I High Feature.

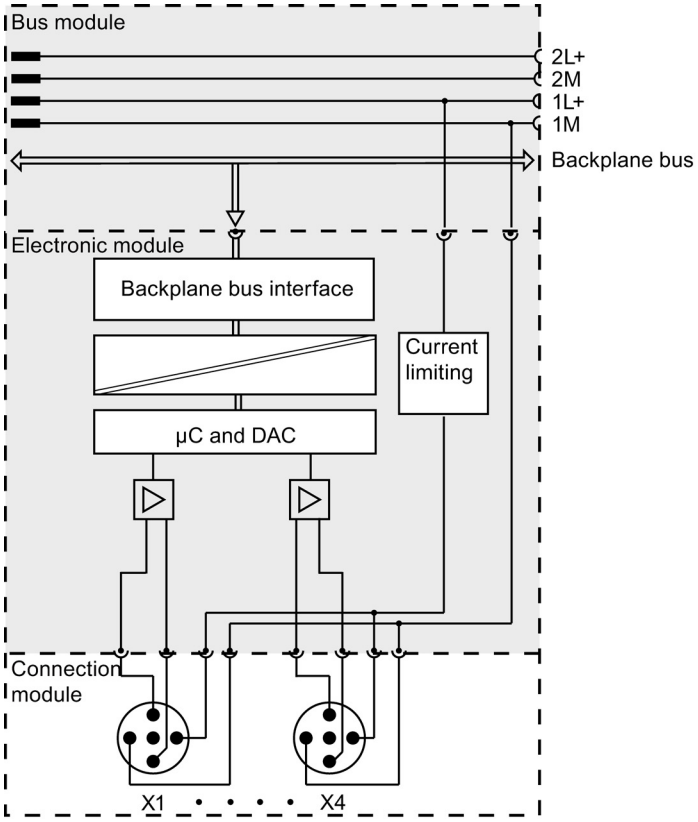

Figure 15-6 Block diagram of 4 AO I High Feature

Technical specifications

Technical specifications	
Dimensions and weight	
Dimensions W x H x D (mm)	45 x 130 x 35
Weight	Approx. 150 g
Voltages and currents	
1L+ electronics/encoder supply	24 V DC
Short-circuit protection	Yes
Reverse polarity protection	Yes; against destruction
Current consumption	
• From backplane bus	10 mA
• From 1L+ electronics/encoder supply (no encoder connected)	110 mA
Power loss of the module	Typ. 2.3 W
Analog outputs	
Number of analog outputs	4
Cable length, shielded	Max. 30 m
No-load voltage	Max. 16 V
Actuator supplies	
Number of actuator supplies	4
Total current up to 55 °C	Max. 1 A
Short-circuit protection	Yes, electronic, for each module, to ground
• Response threshold	Min. 1.4 A
Actuator selection data	
Output ranges (nominal value)	
• Current	±20 mA 4 to 20 mA 0 to 20 mA
Load impedance (in the nominal range of the output)	
• For current outputs	Max. 0.6 kΩ
• At current outputs with inductive load	Max. 1 mH
Permitted current at current output (destruction limit)	100 mA
Wiring the actuators	
• At current output with 2-wire connection	Yes
Analog value generation	
Conversion principle	R network
Conversion time per channel, in ms	0.7 ms
• Cycle time in ms (see Appendix *Response times*)	Number of active channels per module x conversion time

Technical specifications	
• Resolution (including overrange)	±20 mA/15 bit + sign 4 to 20 mA/14 bit 0 to 20 mA/15 bit
Settling time	
• With resistive load	0.1 ms
• With inductive load	1 ms
Injection of substitution values	Yes
Interference suppression, error limits	
Crosstalk between outputs	Max. -40 dB
Operational limit (over the entire temperature range, referenced to output range)	±0.2%
Basic error limit (operational limit at 25 °C, referenced to output range)	±0.15%
Temperature error (referenced to output range)	Max. ±0.01%/K
Linearity error (referenced to output range)	±0.02% [1]
Repeat accuracy (in steady state at 25 °C, referenced to output range)	±0.05%
Output ripple (referenced to output range), bandwidth 0 to 50 kHz	±0.02%
Status, interrupts, diagnostics	
Interrupts	
• Hardware interrupt	No
• Diagnostic interrupt	Configurable
Diagnostic functions	
• Group error display	Red LED (SF)
• Channel error display	Yes
• Diagnostic functions can be read out	Yes
Monitoring for	
• Short-circuit	No
• Wire break	Yes; however, the diagnostic function cannot detect a wire break in the zero range
Isolation	
Isolation tested with	500 V DC
Electrical isolation	
• Between channels and backplane bus	Yes
• Between channels and the 1L+ electronics/ encoder supply	Yes
• Between channels	No
Permitted potential difference	
• Between outputs and ground	2 V AC_{pp}
[1] up to product version 5: ±0.1%	

Response time

The worst-case response time (t_1 to t_3), meaning the expiring between the input of digital output values to internal memory and the settling time of the specified value at the analog output, is equivalent to the total of the cycle time plus the settling time. The worst-case factor is given if the analog channel was converted immediately before a new output value was transferred, and is not converted again unless all other channels have been converted (cycle time).

The figure below shows the response time of an analog output channel.

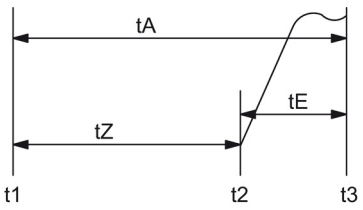

t_A Response time

t_C Cycle time, equivalent to the processing time of the module plus the channel conversion time

t_S Settling time

t_1 New digital output value is available

t_2 Output value accepted and converted

t_3 Specified output value reached

Figure A-34 Response time of an analog output channel

See also

Analog electronic module 4 AO U High Feature (6ES7145-4FF00-0AB0) (Page 408)

Analog electronic module 4 AO I High Feature (6ES7145-4GF00-0AB0) (Page 414)