3300 XL Proximity Transducer System

Datasheet

Cordant™

163236 Rev. M

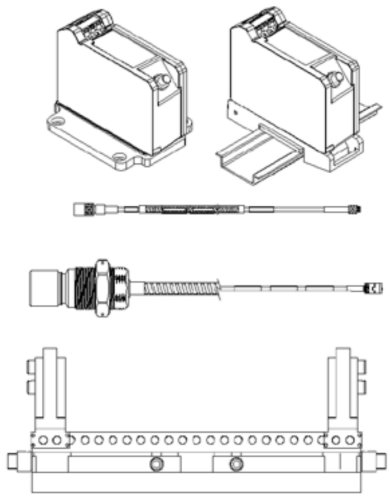

Description

The 3300 XL 25 mm Transducer System consists of a separate 25 mm probe, an extension cable, and a 3300 XL 25 mm Proximitor Sensor. The 0.787 V/mm (20 mV/mil) output gives this system a linear range of 12.7 mm (500 mils). Based on this linear range, the 3300 XL 25 mm Transducer System is suitable for measuring differential expansion (DE) on mid-size to large steam turbine generators caused by the difference in growth rates between the turbine rotor and the machine stator (casing).

Measuring Differential Expansion (DE)

The Differential Expansion measurement is made by two proximity transducers observing a collar or ramp some distance from the thrust bearing. Typical transducer mounting arrangements are:

- Two transducers observing the same side of a collar.
- Two complementary input transducers observing opposite sides of a collar, effectively doubling the measurable DE range.

Two transducers with at least one transducer viewing a ramp on a rotor and the second transducer viewing either a separate ramp or a different location on the rotor to compensate for radial movement. This arrangement adds some error to the measurement, but can measure a longer total DE distance than the complementary measurement.

The criteria for selecting a mounting method are the size of the available target, the expected amount of rotor axial movement and the type of DE target that exists in the machine (collar versus ramp). If sufficient collar height is available, two transducers observing the same side of a

Baker Hughes

collar is the preferred configuration. These two transducers provide redundant measurements.

System Compatibility

The 3300 XL 25 mm probe comes in a large variety of case configurations to physically replace all standard 7200 25 mm, 7200 35 mm and 25 mm DE Integral transducer systems (including side and rear exit probes). The Proximitor Sensor also has an output that is identical to that of the 7200 and 25 mm DE Integral systems, allowing customers to upgrade without requiring any changes in the monitor configuration. When upgrading from previous systems, every transducer system component (probe, extension cable, and Proximitor Sensor) must be replaced with 3300 XL 25 mm components.

Proximity Probe and Extension Cable

The 3300 XL 25 mm probe is designed for maximum survivability in the harshest steam turbine DE environments. It can continually operate and maintain its accuracy in high temperatures up to 200 °C (392 °F), and can withstand intermittent high temperatures up to 250 °C (482 °F). The 25 mm probe has both a front and rear seal which, combined with the FluidLoc cable (standard on all 25 mm probes), prevents moisture from entering the probe tip. Special high-temperature ClickLoc connectors are also standard on the probe and extension cable. Each probe and cable are provided with connector protectors and a disposable connector protector installation tool to ensure that the connectors remain free of contamination. The ClickLoc connector on the probe lead has a removable collar that facilitates routing the cable through tight clearances.

The 3300 XL 25 mm probe is available in many probe case styles, including 1¼-12 or 1⅛-12 English threads, M30x2 or M39x1.5 metric threads, or side or rear exit probes with a 1.06 or 1.50 in diameter smooth probe case. Additionally, threaded 3300 XL 25 mm probe cases come standard with a locknut with predrilled safety wire holes.

Proximitor Sensor

The 3300 XL 25 mm Proximitor Sensor(1) has the same advanced features as our previous 3300 XL Proximitor Sensors. Its thin design allows it to be mounted in either a high-density DIN-rail installation or a more traditional panel mount configuration. Improved RFI/EMI immunity allows the 3300 XL Proximitor Sensor to achieve European CE mark approvals without any special mounting considerations. This RFI immunity also prevents the transducer system from being adversely affected by nearby high frequency radio signals. SpringLoc terminal strips on the Proximitor Sensor require no special installation tools and facilitate faster, highly robust field wiring connections.

(1) Proximitor Sensors are supplied by default from the factory calibrated to AISI 4140 steel. Calibration to other target materials is available upon request.

Mounting Accessories

The correct operation of the transducer system must be verified during installation, and periodically after installation, by physically moving it to simulate the motion of the shaft collar. This requires a mounting bracket that allows the transducer system to slide relative to the shaft rotor and collar.

An optional 3300 XL Sliding Bracket can be ordered for the 25 mm Differential Expansion Transducer for both single transducer and complementary input applications. This mounting bracket makes it easy to accurately verify the transducer system and gap the probes by allowing you to slide the transducer system throughout its linear range. The base plate of the sliding bracket is installed on the inner surface of the turbine case near the differential expansion collar. Probes are installed in the applicable probe adapter, which attaches to the sliding carriage. The sliding carriage slides onto and is secured to the base plate with bolts and safety wire. To

verify and install the transducer, loosen the bolts securing the sliding carriage to the base plate and move the sliding carriage and probes. A Dial Indicator Verification Kit accessory provides a reference by measuring the movement of the sliding carriage. The 3300 XL Sliding Bracket helps ensure that the transducer system remains aligned with and perpendicular to the rotor.

info@apterpower.com
+86 18106909650
WHATSAPP QUOTE >
SOURCE PAGE 3 / 36

Specifications

Unless otherwise noted, the following specifications are for a 3300 XL 25 mm Proximitor Sensor, extension cable and probe between 0°C and +45°C (+32°F to +113°F) at a maximum altitude of 2000m, with a -24 Vdc power supply, a 10 kΩ load, a Bently Nevada supplied AISI 4140 steel target that is 61 mm (2.4 in) diameter or larger, and a probe gap of 7.0 mm (275 mils). The system accuracy and interchangeability specifications do not apply when using a transducer system calibrated to any target other than a Bently Nevada AISI 4140 steel target.

Electrical

Proximitor Sensor Input	Accepts one noncontacting 3300 XL 25 mm Proximity Probe and Extension Cable.
Power	Requires -17.5 Vdc to -26 Vdc without barriers at 12 mA maximum consumption, -23 Vdc to -26 Vdc with barriers. Operation at a more positive voltage than -23.5 Vdc can result in reduced linear range.
Supply Sensitivity	Less than 2 mV change in output voltage per volt change in input voltage.
Output resistance	50 W

Probe dc Resistance

Probe Length (m)	Resistance from the Center Conductor to the Outer Conductor (R_{PROBE}) (ohms)
1.0	6.2 ± 0.5
5.0	7.5 ± 0.8
9.0	8.8 ± 1.1

Extension Cable dc Resistance

Length of Extension Cable (m)	Resistance from Center Conductor to Center Conductor (R_{CORE}) (ohms)	Resistance from Coaxial Conductor to Coaxial Conductor (R_{JACKET}) (ohms)
4.0	1.0 ± 0.25	0.3 ± 0.1
8.0	2.0 ± 0.5	0.6 ± 0.2

Extension cable capacitance	69.9 pF/m (21.3 pF/ft) typical
Field wiring	0.2 to 1.5 mm² (16 to 24 AWG) [0.25 to 0.75 mm² (18 to 23 AWG) with ferrules]. Recommend using three-conductor shielded triad cable. Maximum length of 305 metres (1,000 feet) between the 3300 XL Proximitor Sensor and the monitor. See the frequency response graph for signal rolloff at high frequencies when using longer field wiring lengths.
Linear Range	12.7 mm (500 mils). Linear range begins at approximately 0.63 mm (25 mils) from target and is from 0.63 to 13.33 mm (25 to 525 mils) (approximately –1.5 to –11.5 Vdc).
Average Scale Factor (ASF)	0.787 V/mm (20 mV/mil) nominal
Deviation from best fit straight line (DSL)	Less than ±0.31 mm (±12 mils)

info@apterpower.com
+86 18106909650
WHATSAPP QUOTE >
SOURCE PAGE 4 / 36

System performance over extended temperatures	Over a probe temperature range of -35°C to +120°C (-31°F to +248°F) with the Proximitor Sensor and extension cable between 0°C to +45°C (+32°F to +113°F), the DSL remains within ±0.92 mm (±36 mils). Over a Proximitor Sensor and extension cable temperature range of -35°C to +65°C (-31°F to +149°F) with the probe between 0°C to +45°C (+32°F to +113°F), the DSL remains within ±0.92 mm (±36 mils).
Frequency Response	0 to 2.7 kHz: +0, -3 dB typical, with up to 305 metres (1000 feet) of field wiring.
Recommended Minimum Target Size	61 mm (2.4 in) diameter (flat target)

Effects of 60 Hz Magnetic Fields Up to 300 Gauss (5 metre system)			
Output voltage in mil pp/gauss			
Gap	**Proximitor Sensor**	**Probe**	**Ext. Cable**
0.6 mm (25 mil)	0.224	0.008	0.002
7.0 mm (275 mil)	0.223	0.033	0.004
13.3 mm (525 mil)	0.225	0.076	0.023
Electrical Classification		Complies with the European CE mark.	

Mechanical

Probe Tip Material	Polyetheretherketone (PEEK).
Probe Case Material	AISI 304 stainless steel (SST).
Probe Cable Specifications	75 Ω triaxial, perfluoroalkoxyethylene (PFA) insulated FluidLoc probe cable in the following total probe lengths: 1, 5 or 9 metres.
Extension Cable Material	75 Ω triaxial, perfluoroalkoxyethylene (PFA) insulated FluidLoc cable.
Proximitor Sensor Material	A380 aluminum
Sliding Bracket Material	Anodized aluminum and stainless steel
Sliding Bracket Adjustment Range	
Short bracket horizontal	±25.4 mm (±1.0 in)
Long bracket horizontal	±76.2 mm (±3.0 in)
Probe adapter vertical adjustment	25.4 mm (1.00 in) total travel
System Length	5 or 9 metres including extension cable
Probe and Extension Cable Armor (optional)	Flexible AISI 302 SST with PFA outer jacket.
Tensile Strength (maximum rated)	330 N (75 pounds) probe case to probe lead. 270 N (60 pounds) at probe lead to extension cable connectors.

Connector material	Gold-plated brass and gold-plated beryllium copper

Torque Specifications		
Description	**Maximum Rated**	**Recommended**
All threaded probe cases	163 N•m (120 ft•lb)	68 N•m (50 ft•lb)
M5x.8 sliding bracket cap screws	9.6 N• (85 in•lb)	7.3 N•m (65 in•lb)
M6x1 sliding bracket cap screw (probe clamp)	10.7 N•m (95 in•lb)	7.3 N•m (65 in•lb)

Connector-to-connector Torque	
Recommended torque	Finger tight
Maximum torque	0.565 N•m (5 in•lb)
Minimum Bend Radius (with or without sst armor)	25.4 mm (1.0 in)

System Mass (typical)	
Probe	230 g (8.1 oz) (minimum length case, 1m lead, no armor) 330 g (11.6 oz) (minimum length case, 1m lead, with armor) For longer case lengths add 5.7 g/mm (5.1 oz/in). For 5 m probe length add 180 g (6.3 oz) for non-armored probe or 620 g (22 oz) for armored probe. For 9 m probe length add 360 g (13 oz) for non-armored probe or 1240 g (44 oz) for armored probe.
Extension Cable	45 g/m (0.5 oz/ft)
Armored Extension Cable	140 g/m (1.5 oz/ft)
Proximitor Sensor	255 g (9 oz)
Sliding Bracket	Short with one probe adapter: 580 g (20.5 oz) Long with two probe adapters: 1500 g (53 oz)

Environmental Limits

Probe Temperature Range	
Operating and Storage Temperature	-35°C to +200°C (-31°F to +392°F)
Short Term Operating and Storage Temperature	+250 °C (482 °F) max for less than 24 hours

info@apterpower.com
+86 18106909650
WHATSAPP QUOTE >
SOURCE PAGE 6 / 36

Extension Cable Temperature Range	
Operating and Storage Temperature	-35°C to +200°C (-31°F to +392°F)
Proximitor Sensor Temperature Range	
Operating Temperature	-51°C to +100°C (-60°F to +212°F)
Storage Temperature	-51°C to +105°C (-60°F to +221°F)
Sliding Bracket Temperature Range	
Operating and Storage Temperature	-35°C to +200°C (-31°F to +392°F)
Relative Humidity	100% condensing, non-submersible when connectors are protected. Tested to IEC 68-2-3 damp heat.
Probe Pressure	3300 XL probes are designed to seal differential pressure between the probe tip and case. The probe sealing material consists of a Viton O-ring and compression seal. Probes are not pressure tested prior to shipment. Contact our custom design department if you require a test of the pressure seal for your application.

It is the responsibility of the customer or user to ensure that all liquids and gases are contained and safely controlled should leakage occur from a proximity probe. In addition, solutions with high or low pH values may erode the tip assembly of the probe causing media leakage into surrounding areas. Bently Nevada does not be held responsible for any damages resulting from leaking 3300 XL proximity probes. In addition, 3300

XL proximity probes does not be replaced under the service plan due to probe leakage.

Ordering Information

For the detailed listing of country and product-specific approvals, refer to the *Approvals Quick Reference Guide (108M1756)*.

For additional technical documentation, please log in to bntechsupport.com and access the Bently Nevada Media Library.

3300 XL 25 mm Proximity Probe

330851-AA-BBB-CCC-DD-EE-FF

A: Probe Case Type Option

Standard case types are options 01 through 04.

01	1 ¼ - 12 thread
02	M30x2 thread
03	Smooth 1.06 in dia. - Rear Exit
04	Smooth 1.06 in dia. - Side Exit
05	1 ½ - 12 thread
06	M39x1.5 thread
07	Smooth 1.5 in dia. - Rear Exit
08	Smooth 1.5 in dia. - Side Exit

B: Unthreaded Length Option

Standard unthreaded length is 0.0 mm or 0.0 in There is an additional charge for non-standard unthreaded lengths.

Unthreaded length must be at least 26 mm or 1.0 in less than the case length. Unthreaded length option is 0.0 for smooth case probe types.

Metric Case Types Order in increments of 2 mm	
Maximum Unthreaded Length	224 mm
Minimum Unthreaded Length	0 mm
Example	**050** = 50 mm
English Case Types Order in increments of 0.1 in	
Maximum Unthreaded Length	8.9 in
Minimum Unthreaded Length	0.0 in
Example	**025** = 2.5 in

C: Overall Case Length Option

Standard case lengths are 26, 40, 60, 80, 100 and 250 mm for Metric cases and 1.0, 2.0, 3.0, 4.0, and 9.9 in for English cases. There is an additional charge for non-standard lengths.

Metric Case Types Order in increments of 2 mm

Maximum Unthreaded Length	250 mm
Minimum Unthreaded Length	26 mm
Example	**050** = 50 mm
English and Smooth Case Types Order in increments of 0.1 in	
Maximum Unthreaded Length	9.9 in
Minimum Unthreaded Length	1.0 in (1.5 in for side exit case types)
Example	**020** = 2.0 in
D: Total Length Option	
10	1.0 metre (3.3 feet)
50	5.0 metres (16.4 feet)
90	9.0 metres (29.5 feet)

Five metre probes are designed for use with the five metre Proximitor Sensor ONLY.

E: Armor Option	
00	No Armor
01	with SST Armor

When ordering SST Armor, the minimum probe length is 28 mm or 1.1 in

F: Agency Approval Option	
00	No Approvals
05	Multiple Approvals

For a shorter delivery time, order commonly stocked multi-approvals probes.

Currently, stocked probes consist of the following part numbers:

330851-01-000-020-10-00-05
330851-01-000-030-10-00-05
330851-02-000-040-10-00-05
330851-02-000-080-10-00-05
330851-04-000-015-10-00-05
330851-04-000-020-10-00-05

3300 XL 25 mm Proximitor Sensor

330850-AA-BB

A: Total Length and Mounting Option	
5 0	5.0 metres (16.4 feet) system length, panel mount
5 1	5.0 metres (16.4 feet) system length, DIN mount
9 0	9.0 metres (29.5 feet) system length, panel mount
9 1	9.0 metres (29.5 feet) system length, DIN mount
B: Agency Approval Option	
0 0	No Approvals
0 5	Multiple Approvals

3300 XL 25 mm Extension Cable

330854-AAA-BB-CC

Make sure that the extension cable length and the probe length, when added together, equal the Proximitor Sensor total length.

A: Cable Length Option	
0 4 0	4.0 metres (13.1 feet)
0 8 0	8.0 metres (26.2 feet)
B: Armor and Cable Option	
2 4	High Temperature FluidLoc cable
2 5	Armored High Temperature FluidLoc cable
C: Agency Approval Option	
0 0	No Approvals
0 5	Multiple Approvals

3300 XL Sliding Bracket

330853-AA-BB

A: Bracket Length Option	
0 1	Short – Single Differential Expansion Application
0 2	Long – Complementary Input Differential Expansion Application
B: Probe Adapter Option	
0 0	Adapter not supplied
0 1	1¼-12 thread
0 2	M30x2 thread
0 3	1.06 in diameter Smooth When probe adapters are selected, one is supplied with the short bracket length and two are supplied with the long bracket length.

Dial Indicator Verification Kit

The dial indicator verification kit contains all of the parts needed to verify accuracy of a differential expansion installation. The kit contains a dial indicator, magnetic base, flex mounting arm, and indicator holding rod all housed in a protective carry case

163854-AA

A: Measurement Units Option	
0 1	English Units (0–2 in)
0 2	Metric Units (0–50 mm)

info@apterpower.com
+86 18106909650
WHATSAPP QUOTE >
SOURCE PAGE 13 / 36

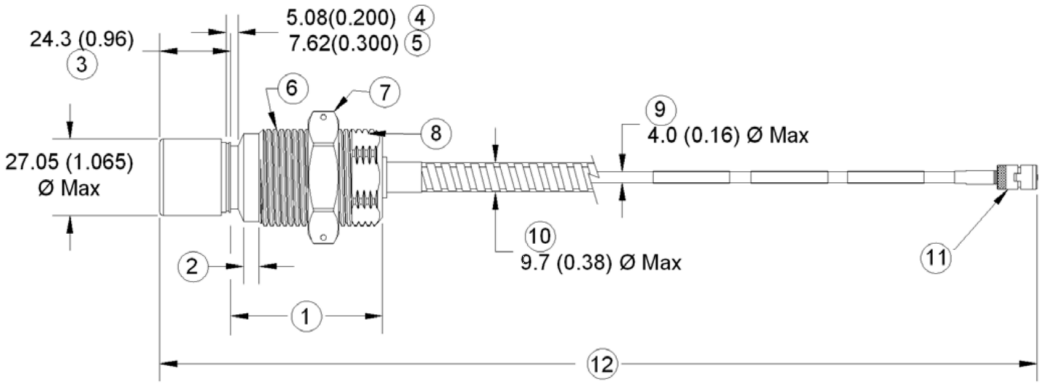

Figure 12: 330851, 3300 XL 25mm Proximity Probe, threaded Cases

1. Case Length
2. Unthreaded Length
3. Probe Tip
4. Case Options –01 and –02
5. Case Options –05 and –06
6. Case thread
7. Hex Nut w/Safety Wire Holes
8. Wrench Flats
9. 75 ohm FluidLoc Cable
10. Optional Stainless Steel Armor
11. Removable Nut Connector 5.3 (0.21) Diameter w/Nut Removed
12. Total Length +30%, -0% for 1m Probes and +20%, -0% for 5m and 9m Probes

Baker Hughes

info@apterpower.com
+86 18106909650
WHATSAPP QUOTE >
SOURCE PAGE 26 / 36

GLOBAL INDUSTRIAL AUTOMATION SOURCING

Ready to source this part?

Ask for availability, pricing and delivery options.

Request a fast quote

Include the product title and any required part number or quantity.

EMAIL

info@apterpower.com

PHONE

+86 18106909650

SCAN TO CHAT ON WHATSAPP

CHAT ON WHATSAPP >

PRODUCT: 330851-01-000-030-10-00-05 / 3300 XL 25 MM THREADED PROXIMITY PROBE

The enclosed manufacturer pages are reproduced without alteration to technical content.

Apter Power is not an authorized distributor, reseller or representative of the products featured.

Product names, trademarks, brands and logos remain the property of their respective owners.