SIEMENS

SIMATIC

Distributed I/O device ET 200M

Operating Instructions



The following supplement is part of this documentation:

No.	Product Information	Drawing number	Edition
1	Interface modules IM 153-4 PN and IM 153-2 HF	A5E02714952-03	01/2012

Preface

Product overview 1

Brief instructions on commissioning 2

Assignment planning 3

Installation 4

Connecting 5

Commissioning 6

Maintenance and service 7

Functions 8

Interrupt, error and system messages 9

Technical Specifications 10

Compatibilities between the IM 153-x A

Order Numbers for the ET 200M B

12/2008
EWA-4NEB780600602-08

Preface

Purpose of the operating instructions

The information contained in these operating instructions enables you to operate an IM 153 interface module together with the modules of the S7-300 spectrum in the distributed I/O ET 200M as a DP slave.

Basic knowledge required

To understand the operating instructions you require general experience in the field of automation engineering.

Range of validity of these operating instructions

Module	Order number	As of product version
IM 153-1	6ES7153-1AA03-0XB0	02
	6ES7153-1AA83-0XB0	01
IM 153-2	6ES7153-2AA02-0XB0	07
	6ES7153-2BA00-0XB0	01
	6ES7153-2BA01-0XB0	01
	6ES7153-2BA02-0XB0	01
	6ES7153-2BA81-0XB0	01
	6ES7153-2BA82-0XB0	01
IM 153-2 FO	6ES7153-2AB01-0XB0	06
	6ES7153-2BB00-0XB0	01
IM 153-4 PN	6ES7153-4AA00-0XB0	01
	6ES7153-4AA01-0XB0	01

Declaration: In the following the term IM 153-x is used in the operating instructions, apart from when a description refers directly to a special variant of the IM 153-x.

A variant of the IM 153-1 as well as of the IM 153-2 is also available as a module for use in expanded environmental conditions ("outdoor"). To find out under which climatic and mechanical environmental conditions you can use the IM 153-1 /-2, refer to the "S7-300 automation system, module specifications (http://support.automation.siemens.com/WW/view/en/8859629)" Reference Manual.

With the IM 153-x in the latest version we reserve the right to enclose a product information bulletin containing up-to-date information regarding the respective IM 153-x interface module or the operating instructions.

The production information can also be found on the Internet (http://support.automation.siemens.com/WW/llisapi.dll?func=cslib.csinfo2&aktprim=99&lang=en). There, search for "IM 153-2", for example.

10.3 Technical specifications of the IM 153-x

General technical specifications

In the "S7-300 automation system, module specifications (http://support.automation.siemens.com/WW/view/en/8859629)" reference manual you will find for the interface module IM 153-x

- all the general technical data that applies for both the S7-300 and the ET 200M and
- the deviating technical data and tests for the interface module IM 153-x for expanded environmental conditions ("outdoor") with the order numbers 6ES7153-1AA**8**x-0XB0 and 6ES7153-2BA**8**1-0XB0.

Technical specifications of the IM 153 interface modules

The technical specifications for all functions of the various IM 153-x versions are included in the following table. Check, together with the table "Properties and functions of the variants" of IM 153-x in chapter "IM 153-x: Variants and properties (Page 17)" to see which version of your IM 153-x supports these functions.

Technical Specifications	IM 153-1	IM 153-2	IM 153-2 FO
Manufacturer ID	$801D_H$	$801E_H$	8071_H
GSD file	SIEM801D.GSD	SIEM801E.GSD	SIEM8071.GSD
• for DPV1	SI01801D.GSG	SI01801E.GSG (for IM 153-2AA0x) SI02801E.GSG (for IM 153-2BA00) SI03801E.GSG (for IM 153-2BAx2) SI04801E.GSG (for IM 153-2BAx2)	SI018071.GSG (for IM 153-2AB0x) SI028071.GSG (for IM 153-2BB00)
Dimensions and weight			
Dimensions W x H x D (mm)	40 x 125 x 117		
Weight, c.	360 g		
PROFIBUS DP interface			
Baud rates	Up to 12 MBaud		9,6; 19,2; 45,45; 93.75; 187.5; 500 kBaud; 1.5; 12 MBaud
Baud rate detection	yes		
Interface	RS 485		FOC
FREEZE capability	yes		
SYNC capability	yes		
PROFIBUS addresses	1 to 125 permissible		
System modification in RUN mode	No	yes	

Technical Specifications	IM 153-1	IM 153-2	IM 153-2 FO
Time synchronization / time stamping	No	yes	
• Accuracy class	—	10 ms / 1 ms	
• Time resolution	—	466 ps	
• Number of digital input signals	—	Max. 32 per slot Max. 128	Max. 128
• Message buffer	—	15 message buffers with in each case max. 20 messages	
• Time interval for sending the message buffers when there is a message	—	1 s	
• Time stamping	—	• Per digital input • Per digital input module • total ET 200M	
• Time stamp in the case of	—	rising / falling edge as incoming or outgoing signal	
• Time format	—	RFC 1119 Internet (ISP)	
Voltages, currents, electrical potentials			
Rated voltage	DC 24 V (DC 20.4 to 28.8 V)		
Current consumption at 24 V	Max. 350 mA	Max. 550 mA max. 600 mA (for IM 153-2BAx2)	Max. 500 mA
Inrush current	2.5 A	2.5 A (for IM 153-2AA0x and IM 153-2BA00) 3.5 A (for IM 153-2BAx1) 3.0 A (for IM 153-2BAx2)	3.5 A
Power on the I/O bus (to supply the I/O modules)	—	max. 1.5 A	—
I^2t	0.1 A^2s		
Recommended external fusing for supply lines	In a configuration with grounded reference potential a fuse is required for redundant interface modules (recommendation: 2.5 A).		
Power dissipation, type	3 W	5 W (for IM 153-2AA0x and IM 153-2BA00) 4 W (for IM 153-2BAx1) 5.5 W (for IM 153-2BAx2)	4.5 W (for IM 153-2AB0x and IM 153-2BB00)

Dimensioned drawing IM 153-1 / -2 / -2 FO

You will find a dimensioned drawing with the rail for the active bus module in the reference manual "S7-300 automation system, module specifications (http://support.automation.siemens.com/WW/view/en/8859629)".

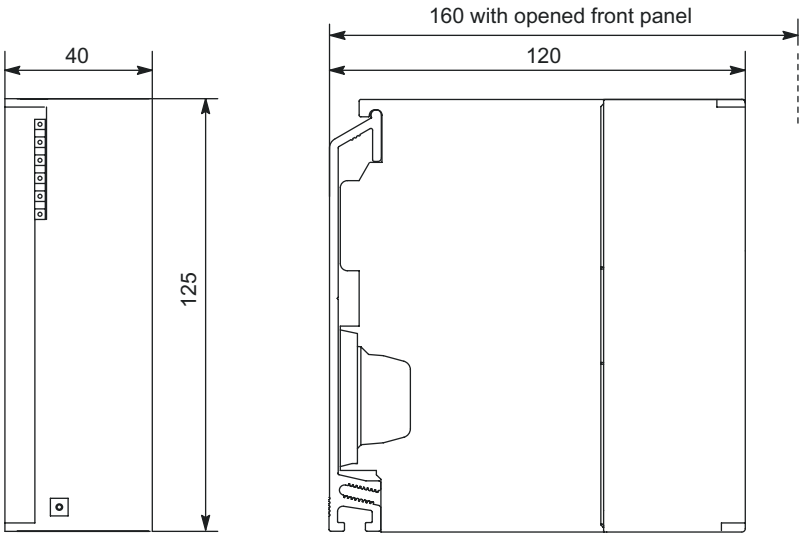

Figure 10-1 Dimensioned drawing of the interface modules IM 153-1, IM 153-2 and IM 153-2 FO

Block diagram IM 153-1 / -2 / -2 FO

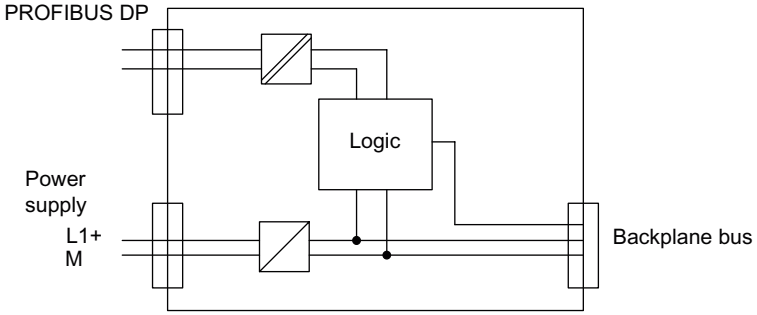

Figure 10-2 Block diagram of the interface modules IM 153-1 and IM 153-2

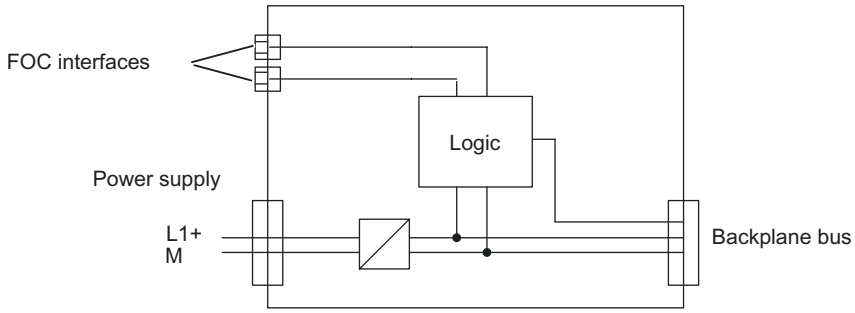

Figure 10-3 Block diagram of the IM 153-2 FO