12.4 4DI 24 VDC/SRC Standard digital electronic module (6ES7131-4BD50-0AA0)

Order number

6ES7131-4BD50-0AA0

Features

- Digital electronic module with four inputs
- Source input
- Rated input voltage 24 VDC
- Suitable for switches and proximity switches (BEROs)

NULLTerminal assignment

The following table indicates the terminal assignment of the 4DI 24 VDC/SRC Standard for the different terminal modules:

Table 12-6 Terminal assignment of the 4DI 24 VDC/SRC Standard

View	Terminal assignment	Remarks
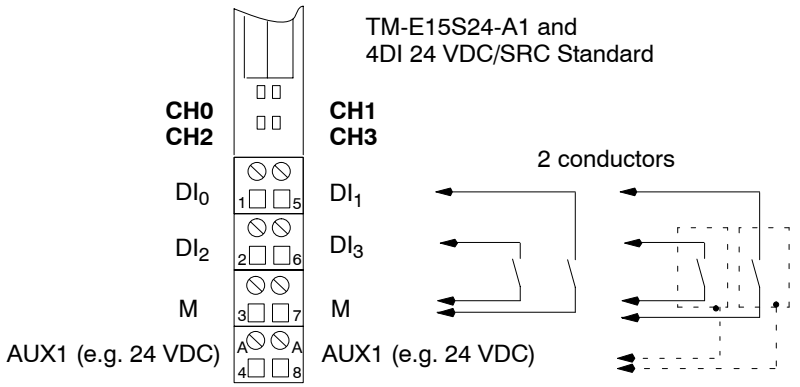		Channel 0: Terminals 1 and 3 Channel 1: Terminals 5 and 7 Channel 2: Terminals 2 and 3 Channel 3: Terminals 6 and 7 DI: Input signal M: Sensor supply

Table 12-6 Terminal assignment of the 4DI 24 VDC/SRC Standard, continued

View	Terminal assignment	Remarks
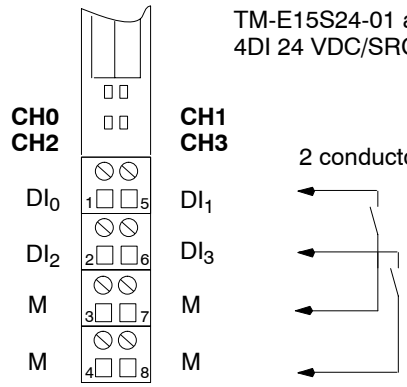		Channel 0: Terminals 1 and 3 Channel 1: Terminals 5 and 7 Channel 2: Terminals 2 and 4 Channel 3: Terminals 6 and 8 DI: Input signal M: Sensor supply
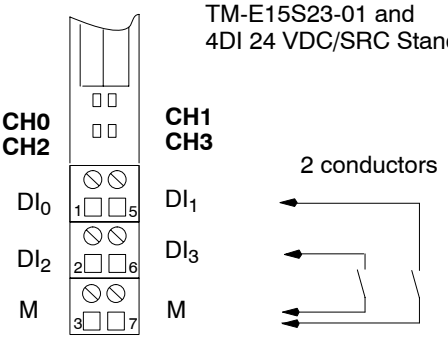		Channel 0: Terminals 1 and 3 Channel 1: Terminals 5 and 7 Channel 2: Terminals 2 and 3 Channel 3: Terminals 6 and 7 DI: Input signal M: Sensor supply
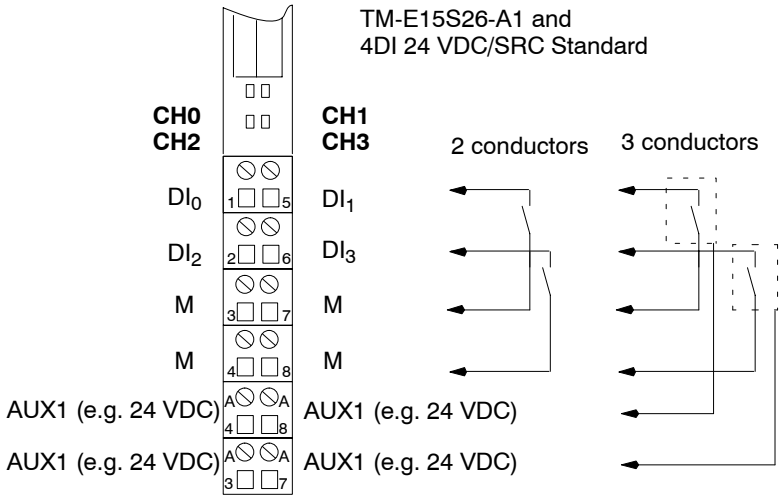		Channel 0: Terminals 1 and 3 Channel 1: Terminals 5 and 7 Channel 2: Terminals 2 and 4 Channel 3: Terminals 6 and 8 DI: Input signal M: Sensor supply

Block diagram

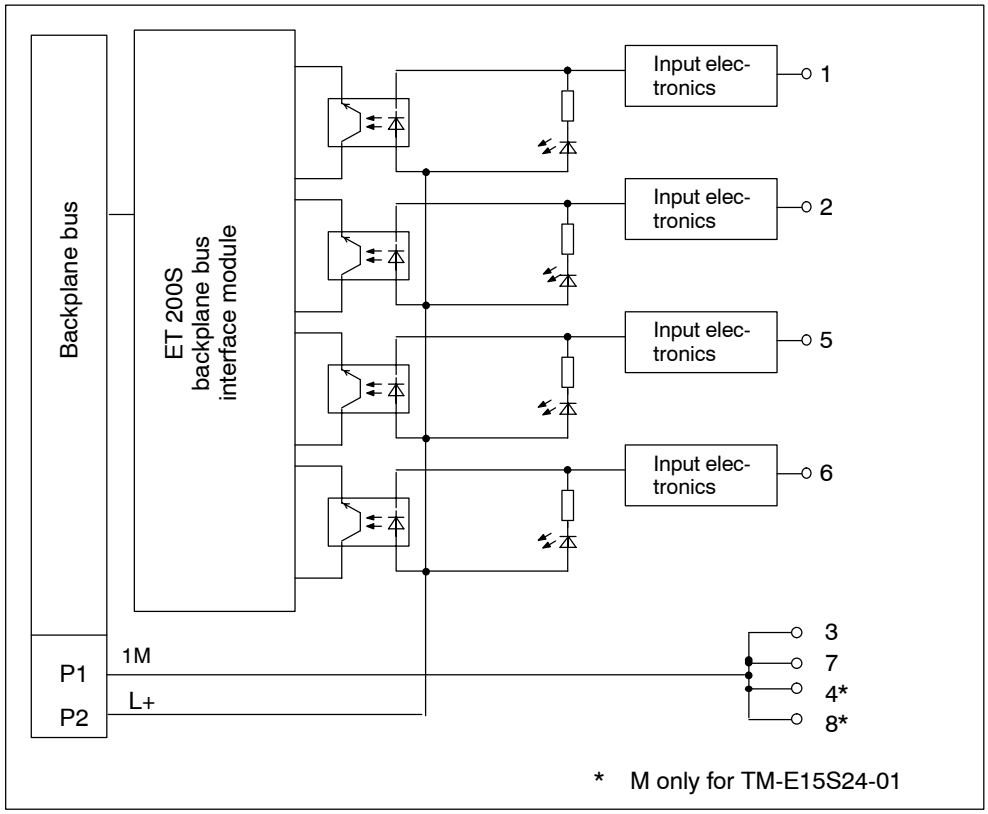

Figure 12-5 Block diagram of the 4DI 24 VDC/SRC Standard

Technical specifications

Dimensions and weight	
Dimensions W × H × D (mm)	15 × 81 × 52
Weight	Approx. 35 g
Data for specific modules	
Number of inputs	4
Length of cable	
• Unshielded	Max. 600 m
• Shielded	Max. 1000 m
Voltages, currents, potentials	
Rated supply voltage (from the power module)	24 VDC
• Reverse polarity protection	Yes
Isolation	
• Between the channels	No
• Between the channels and backplane bus	Yes
Permissible potential difference	
• Between the different circuits	75 VDC, 60 VAC
Insulation tested with	500 VDC
Current consumption	
• From supply voltage	Dependent on the sensor
Power dissipation of the module	Typ. 0.7 W
Status, interrupts, diagnostics	
Status display	Green LED per channel
Diagnostic functions	No

Sensor supply output	
Output voltage	
• With load	Max. M +0.5 V
Output current	
• Rated value	500 mA
• Permitted range	0 to 500 mA
Data for selecting a sensor	
Input voltage	
• Rated value	24 VDC
• For signal “1”	-15 to -30 V[1)]
• For signal “0”	30 to -5 V[1)]
Input current	
• At signal “1”	Typ. 7 mA (at 24 V)
Input delay	
• At “0” to “1”	Typ. 3 ms (2.0 to 4.5 ms)
• At “1” to “0”	Typ. 3 ms (2.0 to 4.5 ms)
Input characteristic curve	To IEC 61131, Type 1
Connection of two-wire BEROs	Possible
• Permitted bias current	Max. 1.5 mA

1) Reference potential is L+