SIEMENS

Installation and Commissioning Guide

Document No. 129-408

October 5, 2009

RWD44U Controller



Function

RWD44U controllers are intended for HVAC and Refrigeration systems including Heat Pumps. They are suitable for 1-, 2-, and 3-stage compressors.

Input X1 detects the room or space temperature and compares it with the setpoints. Depending on the deviation, the controller acts accordingly with its outputs to achieve the desired setpoints.

Function Summary

- Controller – Stand-alone controller with four two-position (On/Off) outputs.
- Universal input (X1) for the main temperature sensor.
- Universal input (X2) for the following auxiliary functions:

On/Off (Standby)	Setpoint reset
Remote setting unit	Sensor averaging
Alarm	Winter/Summer setpoint changeover
Filter alarm	Sensor select

- Digital input (D1) for the following digital functions:
  - Day/night changeover setpoint
  - On/Off (Standby)
  - Alarm
  - Filter alarm
- The RWD44U controller is intended for either DIN rail mounting in a switchboard or screw mounting with a protective enclosure.
- Desired output configuration and auxiliary function must be entered for initial set-up. See *Initial Program Settings (New Controller).*

Application

The RWD44U has standard pre-configured applications. There are three main configuration loops with combinations of ten auxiliary functions. See Table 1.

Table 1. Application Numbers.

H = Heating C = Cooling Cr = Compressor RV = Reversing valve Eco = Economy **Auxiliary Loop**	**Main Loop**  #1 × (2H & 2C)	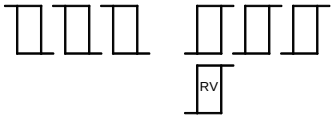 #2 × (3 stage Cr + RV cool)	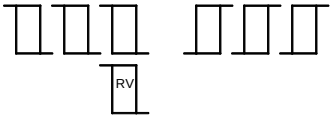 # 3 × (3 stage Cr + RV heat)
#x0 (Standby)	#10	#20	#30
#x1 (Remote setpoint)	#11	#21	#31
#x2 (Alarm)	#12	#22	#32
#x3 (Filter alarm)	#13	#23	#33
#x4 (Setpoint reset)	#14	#24	#34
#x5 (Avg. X1, X2)	#15	#25	#35
#x6 (Win/Sum Digital)	#16	#26	#36
#x7 (Win/Sum Analog)	#17	#27	#37
#x8 (Sensor select)	#18	#28	#38
#x9 (Active input)	#19	#29	#39

NOTE: Three-stage compressor applications are also used for one- and two-stage applications. Compressor stages are selected during commissioning.

Example: Two-stage compressor with reversing valve on heating, and two averaging sensors: **#35**

Table 2. Input Configurations – X1, X2, and D1.

Applications 10 Through 39						
			D1 Options			
	X1	**X2**	**Filter Alarm**	**Alarm**	**Day/Night**	**Standby**
#x0 (Standby)	Main	Standby	♦	♦	♦	–
#x1 (Remote setpoint)	Main	Remote setpoint	♦	♦	♦	♦
#x2 (Alarm)	Main	Alarm	♦	–	♦	♦
#x3 (Filter alarm)	Main	Filter alarm	–	♦	♦	♦
#x4(Setpoint reset)	Main	Setpoint reset	♦	♦	♦	♦
#x5 (Avg. X1, X2)	Main	Main	♦	♦	♦	♦
#x6 (Win/Sum Digital)	Main	Win/Sum	♦	♦	♦	♦
#x7 (Win/Sum Analog)	Main	Win/Sum	♦	♦	♦	♦
#x8 (Sensor select)	Main	Main	♦	♦	♦	♦
#x9 (Active input)	Main	Standby	♦	♦	♦	–

Table 3. Output Configurations – Q1, Q2, Q3, and Q4.

Application Numbers	**Q1**	**Q2**	**Q3**	**Q4**
10 through 19	Heating Stage 2 (H2)	Heating Stage 1 (H1)	Cooling Stage 1 (C1)	Cooling Stage 2 (C2)
20 through 29 30 through 39	Reversing Valve (RV)	Compressor Stage 1 (Cr1)	Compressor Stage 2 (Cr2)	Compressor Stage 3 (Cr3)

NOTE: Application sheets for the listed applications are available online.

Display Explanation

Symbol	Description	Setting Range	Symbol	Description	Setting Range
Main Screen					
	Adjustable setting screen		TOOL	PC communication port being used	
#10	Application No	10 through 39	OUT RANGE	The setting is out of range	
☼	Day time operation		Err	Sensor error	
☾	Night time operation		Sec	Seconds	
X1	Universal (Main) Input X1	Ni 1000 Ω: -58°F to 302°F (-50°C to 150°C) (unchangeable) Pt 1000 Ω: -4°F to 356°F (-20°C to 180°C) (unchangeable) 0 to 10 Vdc: -100 to 2400	X2	Universal (Auxiliary) Input	Ni 1000 Ω: -58°F to 302°F (-50°C to 150°C) (unchangeable) Pt 1000 Ω: -4°F to 356°F (-20°C to 180°C) (unchangeable) 0 Vdc to 10 Vdc: -100 to 2400 Variable resistor: The resistance range should be within 0 Ω to 1000 Ω
°C	Celsius scale		❄	Cooling	
°F	Fahrenheit scale		♨	Heating	
K	Kelvin		SP-h	Setpoint on the heating side for temperature control	
Q	Digital outputs		SP-c	Setpoint on the cooling side for temperature control	
R/V	Reversing valve status = On		▭	Output status = Off	
⏻	Standby mode		▬	Output status = On	
"OFF"	Controller = Off				
"ON"	Controller = on standby				
PS 4 – Differentials and Delays					
SD	Switching Differential	0.1 K to 50 K	TD	Time Delay from heat ⇔ cool	0 to 4,096 sec
TON	Minimum switch on time for Q	0 to 4,096 sec	TD	Time Delay for next stage ON	0 to 4,096 sec
TOFF	Minimum switch off time for Q	0 to 4,096 sec			
PS 3 - Auxiliary Control Loop Set-up					
	Setpoint reset shift (Start point, End point and Shift differential)			Setpoint reset shift (Start point, End point and Shift differential)	
SUM	Summer changeover point			Time delay from Winter ⇔ Summer changeover point	
WIN	Winter changeover point		D1	Digital input function	
PS 2 - Unit, X1 and X2 Sensor Type and Sensing Range Definition					
Unit	Define unit	°C or °F	ΔX1	Calibration offset for X1 (Ni and Pt sensor only)	-5 K to 5 K or -9°F to 9°F
X1NI 1000	X1 is Ni 1000 Ω temperature sensor	Ni 1000 Ω: -58°F to 302°F (-50°C to 150°C) (unchangeable)	ΔX2	Calibration offset for X2 (Ni & Pt sensor only)	-5 K to 5 K or -9°F to 9°F
X2NI 1000	X2 is Ni 1000 Ω temperature sensor	Ni 1000 Ω: -58°F to 302°F (-50°C to 150°C) (unchangeable)	X1L	Start point of the X1 (for 0 Vdc to 10 Vdc only)	-100 to 2400
X1Pt 1000	X1 is Pt 1000 Ω temperature sensor	Pt 1000 Ω: -4°F to 356°F (-20°C to 180°C) (unchangeable)	X2L	Start point of the X2 (for 0 Vdc to 10 Vdc only)	-100 to 2400
X2Pt 1000	X2 is Pt 1000 Ω temperature sensor	Pt 1000 Ω: -4°F to 356°F (-20°C to 180°C) (unchangeable)	X1H	Stop point of the X1 (for 0 Vdc to 10 Vdc only)	-100 to 2400
X2SP	Remote setpoint	0 Vdc to 10 Vdc or 0 to 1000 Ω	X2H	Stop point of the X2 (for 0 Vdc to 10 Vdc only)	-100 to 2400
X2Vr	Variable Resistor	0 Ω to 1000 Ω			

Display Explanation, Continued

PS 1 – Application Number Selection:				
⏻	Standby mode		AVERAGE	Averaging sensor X1 and X2
REM	Remote setting		WIN/SUM AnG	Winter/Summer changeover by analog input
ALARM	Alarm indication		WIN/SUM diG	Winter/Summer changeover by digital input
FILTER	Filter alarm indication		X2⇔X1	Selecting X2 or X1 as the main sensor
COMP	Setpoint reset function		Act	Active sensor input

Commissioning Guide

Commissioning is implemented via push buttons on the controller. The push buttons have the following functions:

Press SEL ● Button to enter the PS page OR edit and save the value when the page appears with the logo ±

Press + ▲ Button for viewing the next page OR to increase the value.

Press – ▼ Button for viewing the previous page OR to decrease the value.

Changing a parameter:

1. Press the **SEL** λ button.
2. Press the **+** σ or **–** τ button to increase or decrease the flashing parameter.
3. Press the **SEL** λ button to save the value (During PS mode, the values are saved only after exiting the PS mode).

NOTE: A 9-pin port is provided for optional commissioning via Siemens software tool. See *Software Tool (Optional Programming).*

Initial Program Settings (New Controller)

There are five levels of parameter setting (PS) modes: PS1 through PS4, and a setpoint mode. Each PS has a set of default parameters, which can be changed during commissioning.

When powered the first time, the controller will proceed to PS1 with default application 10. See below for commissioning steps.

PS 1 – Application Settings	Range/Type	Default
Enter application number	10 through 39	10
Select number of compressor stages	1-, 2- or 3-stage	2-stage
Select reversing valve output – On or Off during no demand	On or Off	Off

After completing PS1, the user has the option to progress to setpoint mode (only for new RWD) by waiting for two seconds and default parameters will be accepted. If parameters PS2 through PS4 need to be adjusted, press the **+** ▲ button immediately to the next PS (see *Commissioning Flowchart*).

PS 2 – Input X1, and X	Range/Type	Default
Select unit	°F or °C	°F
Select main sensor X1	Ni 1000, Pt 1000, 0 to 10V	Ni 1000
Enter X1 sensor calibration offset (Ni or Pt only)	9°F (5°C)	0°F
Enter X1 active sensor range (0 to 10 Vdc only)	-100 to 2400	32°F to 122°F (0°C to 50°C)
Select auxiliary sensor X2	Ni 1000, Pt 1000, 0 to 10 Vdc	Ni 1000
Enter X2 sensor calibration offset (Ni or Pt only)	± 9°F (±5°C)	0°F (0 K)
Enter X2 active sensor range (0 to 10 Vdc only)	-100 to 2400	32°F to 122°F (0°C to 50°C)

PS 3 – Digital and Auxiliary Functions	Range/Type	Default
Select digital input D1	D/N, Filter Alarm, Alarm, on/off	Depends on #x
Aux. Function = Setpoint reset		
Setpoint reset start point, reverse acting	Setpoint reset sensor range	72°F (22°C)
Setpoint reset end point, reverse acting	Setpoint reset sensor range	65°F (18°C)
Setpoint reset shift	Setpoint reset sensor range	8°F (4 K)
Setpoint reset n start point, direct acting	Setpoint reset sensor range	83°F (28°C)
Setpoint reset end point, direct acting	Setpoint reset sensor range	90°F (32°C)
Setpoint reset shift	Setpoint reset sensor range	8°F (4 K)
Aux. function = WIN SUM analog		
Enter changeover setpoint for winter	Sensor range	72°F (22°C)
Enter changeover setpoint summer	Sensor range	83°F (28°C)
Enter changeover time delay, winter ⇔ summer	00.01 to 23 hours 59 minutes	00.01 minute

PS 4 – Differentials and Time Delays	Range/Type	Default
Enter switching differential (SD) for output stage 1, 2, and 3	Sensor range	2°F (1 K)
Enter min On time for output stage 1, 2, and 3	0 to 4,096 s	0 s
Enter min Off time for output stage 1, 2, and 3	0 to 4,096 s	60 s
Enter time delay TD for next stage On	0 to 4,096 s	30 s
Enter changeover time delay TD, heating ⇔ cooling demand	0 to 4,096 s	120 s

Setpoint Mode	Range/Type	Default
Enter SP-h1	Sensor range	70°F (21°C)
Enter SP-h2	Sensor range	68°F (20°C)
Enter SP-h3	Sensor range	66°F (19°C)
Enter SP-c1	Sensor range	74°F (23°C)
Enter SP-c2	Sensor range	76°F (24°C)
Enter SP-c3	Sensor range	77°F (25°C)
If D1 is set for Day/Night		
Enter night SP-h1	Sensor range	64°F (18°C)
Enter night SP-h2	Sensor range	62°F (17°C)
Enter night SP-h3	Sensor range	60°F (16°C)
Enter night SP-c1	Sensor range	79°F (26°C)
Enter night SP-c2	Sensor range	80°F (27°C)
Enter night SP-c3	Sensor range	82°F (28°C)
For remote setpoint – Heating stage 1 is the remote setpoint and the reference point. A ΔSP is set between the stages. 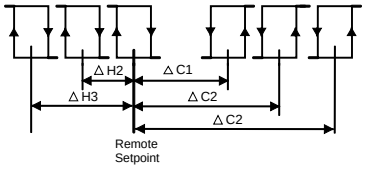		
Enter ΔSP H2	Sensor range	-2°F (-1 K)
Enter ΔSP H3	Sensor range	-4°F (-2 K)
Enter ΔSP C1	Sensor range	4°F (2 K)
Enter ΔSP C2	Sensor range	6°F (3 K)
Enter ΔSP C3	Sensor range	8°F (4 K)

After completing the setpoints, press + button for the main display.

Main Display (Normal Operation)

The controller is active during main display.

The main display shows:

1. Whether Q... is On or Off (☐ = Off, ν = On).
2. X1 temperature in °F or °C.
3. Day/night settings (☼ = day, ☾ = night).
4. Reversing valve status (☐ = Off, R/V = On).

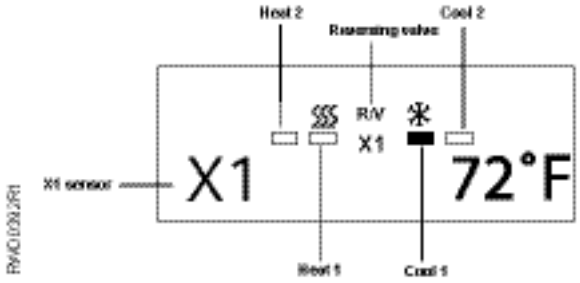

Figure 1. Main Display.

Other displays are available by pressing the **+** ▲button. The various displays are listed below.

1. Setpoints
2. Digital input active or inactive
3. X2 sensor reading
4. Q… output status
5. Application #xx

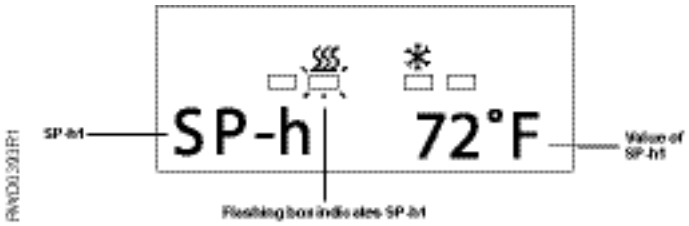

Figure 2. Setpoint Display.

Changing Setpoint in Main display

On entering any of the setpoint displays, the setpoint on display can be adjusted by pushing the SEL λ button. Increase value by pressing the **+** ▲ button, or decrease the value by pressing the **–** ▼ button. When the required value is reached, press the SEL λ button to save the new value.

Time out

For setpoint adjustment during normal operation the controller will exit the setting after 20 seconds, and return to the main screen. However, for setpoint adjustment in PS mode, there is no time limit. The controller remains in the PS mode until the user completes the entire process.

NOTE: Changing the heating setpoints to a lower value, set SP-h3 before setting SP-h2 and SP-h1.
Changing the cooling setpoints to a higher value, set SP-c3 before setting SP-c2 and SP-c1.
The controller will display an 'out range' message if SP-h3 > SP-h2>SP-h1 and SP-c1>SP-c2>SP-c3.

Main Display to PS Mode

Press both + and − buttons first, and hold for five seconds to enter the PS mode. PS4 will appear first.

Press the − button to scroll down to the right PS for editing parameters.

NOTE: When changing from the main display to PS mode, the controller remains active unless a parameter has been changed. Ensure all outputs are disconnected before changing an application.

Software Tool (Optional Commissioning)

A software tool for the controller application selection and parameter adjustment is available. It is a user-friendly Windows® 95 (or later) based software tool. The software tool has the following functions:

Adjusting all available parameters.
Uploading and downloading the program.
Saving parameter settings.
Viewing or providing a printout of the settings.
Parameters can be hidden from displaying.

Commissioning Flowchart

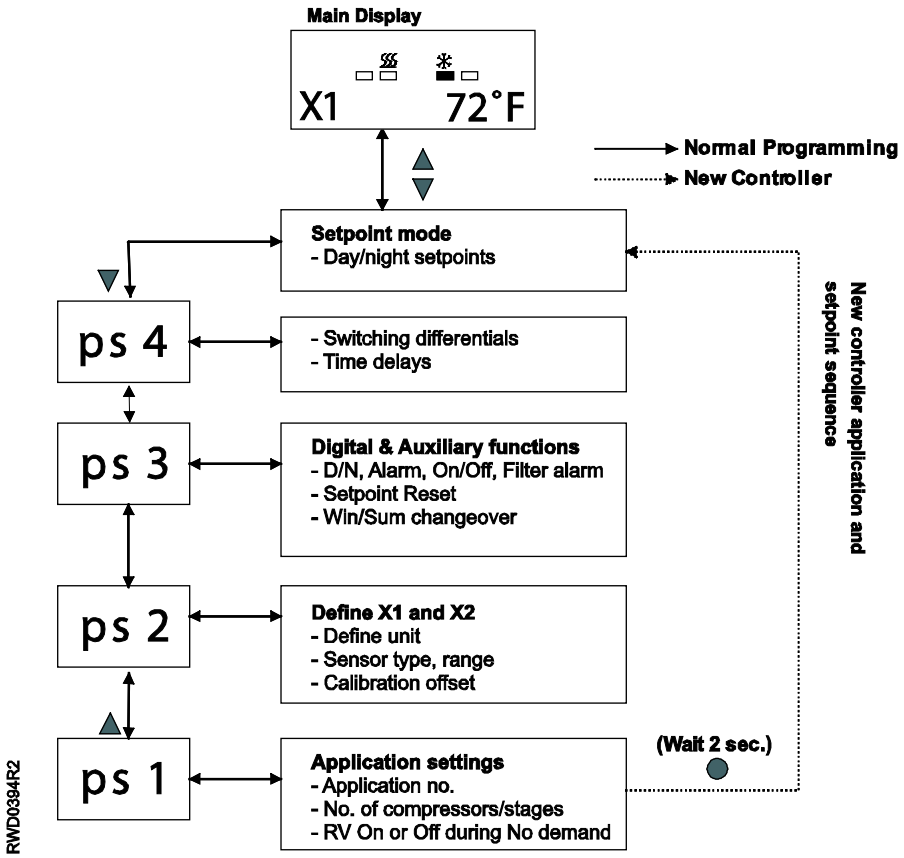

Figure 3. Commissioning Flowchart.

Wiring Terminals

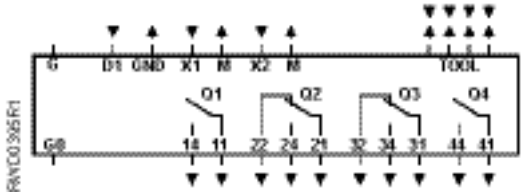

NOTE: Screwed terminals for cables with min 2 × 16 or 1 × 14 AWG.

Figure 4. Wiring Terminals.

G, G0	SELV 24 Vac power supply
D1	Digital input
M	Ground (G0) for signal inputs and universal inputs
Q1 to Q4	Relay outputs: Max. rating 24 to 240 Vac Vac/5A res/5 FLA/30 LRA/ 1/2 HP
X1	Signal input (main input: Siemens Ni 1000, Pt 1000 and 0 to 10 Vdc)
X2	Signal input (aux input Siemens Ni 1000, Pt 1000, 0 to 10 Vdc, and remote setting unit)
Tool	Communication port for PC (9-pin plug)

Wiring Diagrams

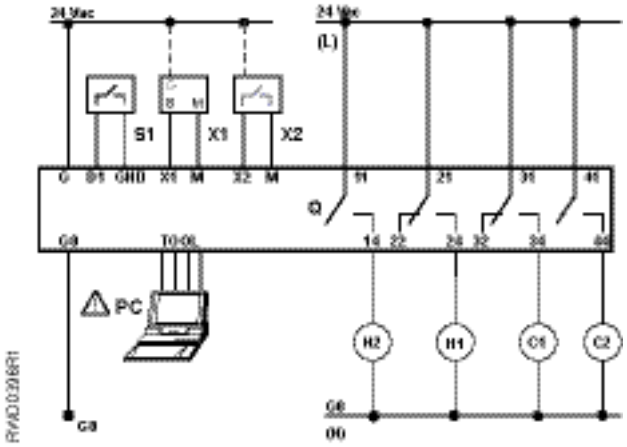

C1	Cooling stage 1
C2	Cooling stage 2
H1	Heating stage 1
H2	Heating stage 2
X1	Room temperature sensor
X2	Auxiliary sensor or a digital input
S1	Switch or time clock
PC	Personal computer (optional, for set-up only)

Figure 5. Applications 10 Through 19.

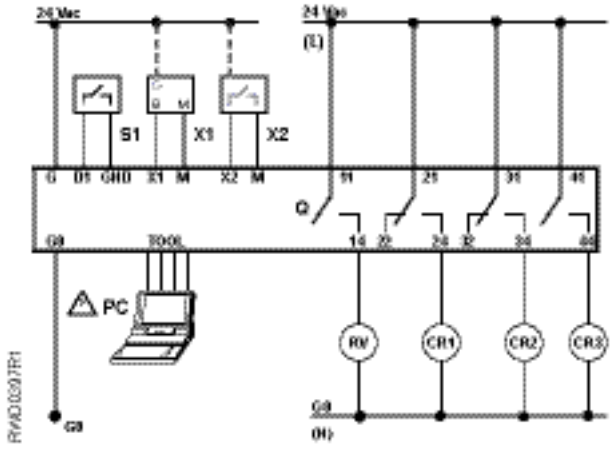

CR1	Compressor stage 1
CR2	Compressor stage 2
CR3	Compressor stage 3
RV	Reversing valve relay
X1	Main temperature sensor
X2	Auxiliary sensor or a digital input
S1	Switch or time clock
PC	Personal computer (optional, for set-up only)

NOTE: For a single compressor, CR2 and CF3 are not connected. For a dual compressor, CR3 is not connected.

Figure 6. Applications 20 Through 39.

CAUTION:

The TOOL signal ground is galvanically connected to G0 inside the controller. If the signal line of the computer is grounded to Earth, the G0 line after TOOL connection will be grounded as well. This will change the SELV to a PELV.

Installation

Mounting Notes

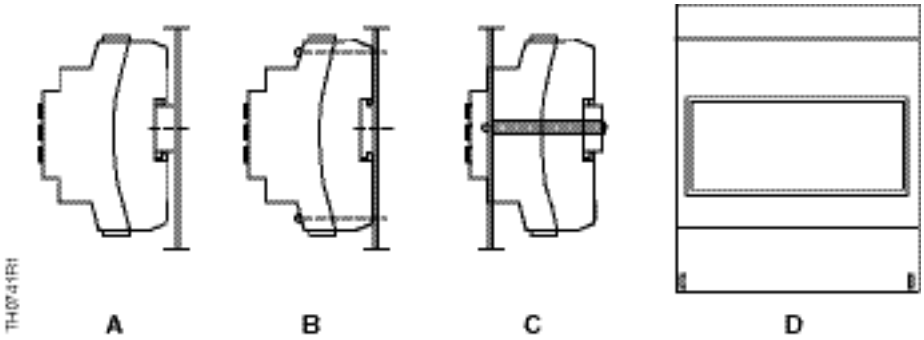

Figure 7. Mounting Options.

The RWD44U can be mounted as follows:
Observe all local installation and mounting regulations.

A On a DIN rail (EN 50 022-35 × 7.5) at least 4.75 inches (120 mm) long for RWD44U.

B Wall-mounted with two screws. (Minimum length of the screws should be 2.75 inches (70 mm) (ϕ3.2 mm)

C Front-mounted using standard elements:

- One DIN rail 5.90 inches (150 mm) long for RWD44U
- Two hexagonal placeholders 1.96 inches (50 mm)
- Washers
- Screws

NOTE: (Ensure all terminations are tightened before final mounting to front panel.)

D Inside the ARG62.21 (single RWD44U).

WARNING:

There must be a minimum of 0.31 inches (8 mm) distance from terminations to panel/enclosures to avoid electric shock.

Electrical Installation Notes

- Standard cables can be used for the controller. However, when mounting in an environment greatly exposed to EMI, use only shielded cables.
- The RWD44U is designed for 24 Vac operating voltage.
- Low voltage must comply with the requirements for safety extra-low voltage (SELV) as per EN 60730.
- Use safety insulating transformers with double insulation as per EN 60742; they must be designed for 100% duty.
- When using several transformers in one system, the connection terminals G0 must be galvanically connected.
- Supplying voltages above 24 Vac to low voltage connections may damage or destroy the controller or any other connected devices. Additionally, connections to voltages exceeding 42 Vac endanger personal safety.

Dimensions

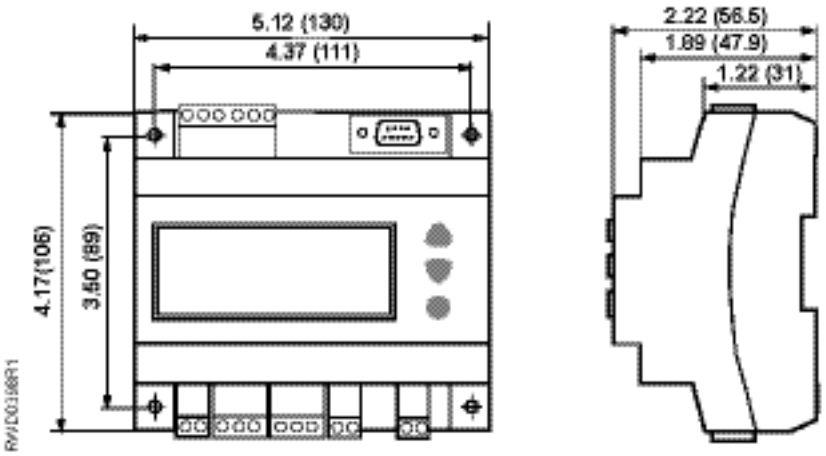

Figure 8. RWD44U Controller Dimensions in Inches (Millimeters).

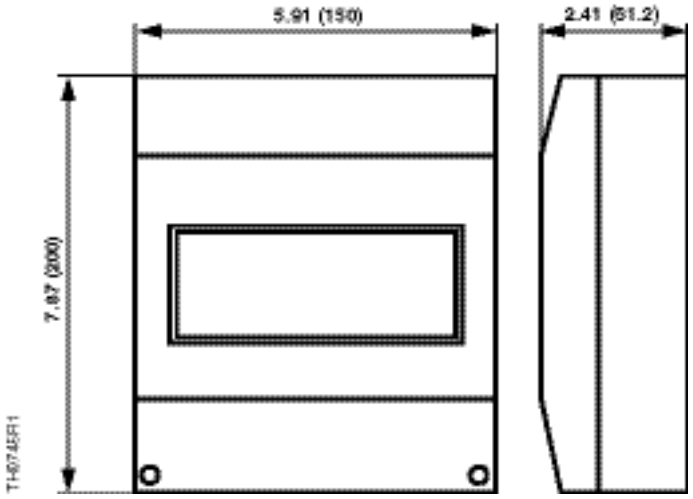

Figure 9. ARG62.21 Enclosure Dimensions in Inches (Millimeters).

Information in this publication is based on current specifications. The company reserves the right to make changes in specifications and models as design improvements are introduced. Windows is a registered trademark of Microsoft Corporation. Other product or company names mentioned herein may be the trademarks of their respective owners. © 2007 Siemens Industry, Inc.