SIEMENS

SIMATIC

PG 702 Programming Device

Manual

This manual has the order number:

6ES7702-0AA01-8BA0

Preface, Contents

Introduction to the PG 702 1

Installing the PG 702 2

Creating a Sample Program 3

Working with the PG 702 4

Editing STL Programs 5

Debugging and Testing the Program 6

Overview of Menus and Instruction Sets A

ASCII Characters B

Error Codes C

Technical Specifications and Hardware D

PG 702 Troubleshooting Guide E

Index

C79000-G7076-C709

Release 01

Preface

Purpose

The PG 702 is designed for editing on-line programs and must be connected to an S7-200 CPU in order to perform its functions. It can transfer an entire program (for example, a statement list program, CPU configuration, and the data block) from one CPU to another CPU by transferring programs to and from its internal non-volatile flash memory. The PG 702 can edit all three types of memory blocks: program block, data block, and system data block (CPU configuration).

This *PG 702 Programming Device User Manual* provides information about the software features of the PG 702 Statement List version of the hand-held programmer for S7-200 CPUs. It emphasizes the features required to program, edit, and monitor new and existing programs. This manual also specifies how to use diagnostic features and PG menu functions, such as CPU mode changes and system configuration.

Audience

This manual contains entry-level information on programming SIMATIC S7 programmable controllers (S7-200 family) and is also intended for the experienced control engineer.

Scope of the Manual

This manual describes version 2.0 of the PG 702 programming device (order number 6ES7 702 0AA01 0YA0) using the international mnemonics and keyboard overlay.

Introduction to the PG 702

1

This chapter provides you with a general overview of the PG 702. It explains the tasks, functions, and function range of the PG 702.

Chapter Overview

Section	Description	Page
1.1	Using the PG 702	1-2
1.2	Programming with the PG 702	1-3

The PG 702 is a programming device for the SIMATIC S7-200 family of CPUs. It has a two-line display. You can use the PG 702 to modify the program in the CPU, change the CPU configuration, edit the data block of the CPU, store the entire CPU program in the non-volatile flash memory of the PG 702, and change the mode of the CPU. In addition, it performs several auxiliary functions that are detailed in this manual.

1.1 Using the PG 702

The main application areas are as follows:

- Create/modify the statement list program
- Modify the CPU configuration
- Create/modify the CPU data block
- Test your program in an S7-200
- Transfer the entire CPU program to or from the PG 702 non-volatile memory
- Change the mode of the CPU

Mounting the PG 702 permanently in a panel or cabinet door makes it possible for you to install a stationary programming device that is permanently connected to an S7-200 and easily accessible to perform necessary service.

PG 702 Language

You can set the PG 702 to any of the following languages: German, English, French, Italian, and Spanish.

You can use both SIMATIC and international mnemonics.

Functionality

Use the PG 702 to perform the following tasks:

- Create a new program or change an existing program in an S7-200
- Test an existing program in the S7-200
- Manage your programmable controller, such as setting the CPU node address, clearing the CPU, and configuring your programmable controller
- Transfer the CPU program, data, and configuration blocks as a whole from one CPU to another by means of non-volatile memory in the PG 702

1.2 Programming with the PG 702

Creating a User Program

You can use the PG 702 to change an existing program in an S7-200 or to create a new one. If your program is a ladder diagram block, the program is automatically converted to statement list (STL).

Note

All ladder programs can be represented in STL, but not all STL programs can be represented as ladder diagrams. If you want to write or change a program with the PG 702, and you want to view this program later with a ladder editor such as STEP 7-MicroWIN, be sure to construct networks that can be displayed as ladder diagrams. To view the program in ladder, you must divide segments of code with the keyword NETWORK.

Editing an On-Line Program

The PG 702 can edit all three types of memory blocks: CPU program blocks, system data blocks (CPU configuration), and data blocks.

To edit the program block, you must first upload the program block from the CPU. You can then edit the program and download it to the CPU. The download function is disabled unless you have uploaded a program block. If there is no program in the CPU, the PG 702 creates a program block.

Use the data block editor to edit the data block. When you enter the data block editor, the PG 702 determines if the CPU has a data block present. If there is a data block available, it is uploaded. If one is not present, the PG 702 creates one.

The CPU configuration is modified and updated one field at a time.

For more information on the editing functions, see Chapter 5.

2.1 Connecting the PG 702

Programmable Controller Connection

Connect the PG 702 to the PPI interface on the CPU using the supplied programmer cable at the programmer cable port (see Figure 2-1). This cable supplies the programming device with the necessary power. The programming device can be operated only when it is connected to an S7-200 CPU.

External Power Supply Connection

To connect the PG 702 with a cable longer than the one provided with the programming device (greater than 2.5 m or 8.2 ft.), you must operate the PG 702 with a separate power supply unit (24 VDC, safety extra-low voltage = SELV).

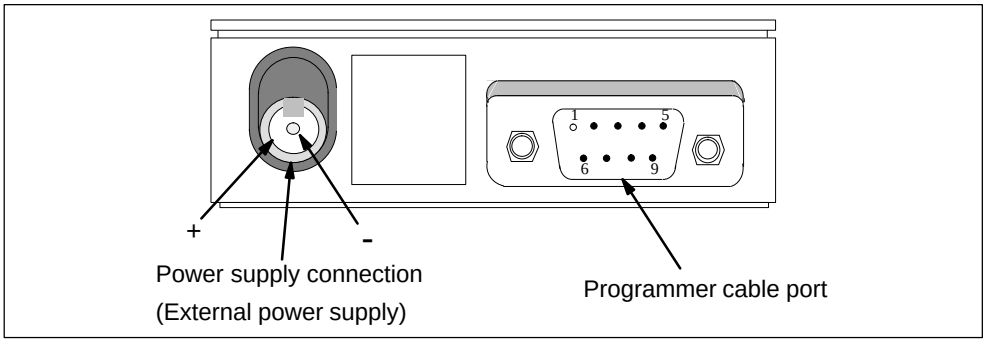

Figure 2-1 PG 702 Connections

2.3 Mounting the PG 702 in a Panel or Cabinet Door

Warning

Failure to disable all power to the PG 702 and related equipment during installation or removal procedures may result in electrical shock. Electrical shock can cause death or serious personal injury, and/or damage to equipment. Disconnect all power to the PG 702 and related equipment before installation or removal.

The PG 702 is prepared for permanent mounting in a panel or cabinet door. To do this, proceed as follows:

1. Make a standard cutout to DIN 43700 (138 mm x 68 mm/5.2 in. x 2.7 in.) in the panel.
2. Remove the three screws on the rear of the PG 702 (see Figure 2-4).
3. Detach the rear panel.
4. Remove the center piece from the self-adhesive spacer rings supplied and stick the rings over the drilled holes for the screws on the rear of the casing as required for your mounting:
   - No ring for metal thicknesses up to 0.3 mm (0.012 in.)
   - One ring for metal thicknesses of 0.3 mm to 1.5 mm (0.012 in. to 0.06 in.)
   - Two rings for metal thicknesses of 1.5 mm to 4 mm (0.06 in. to 0.16 in.)
5. Guide the front part of the casing into the cutout in the panel.
6. Push the rear panel onto the casing.
7. Fix the PG 702 in position with the screws, and slightly tighten the screws.

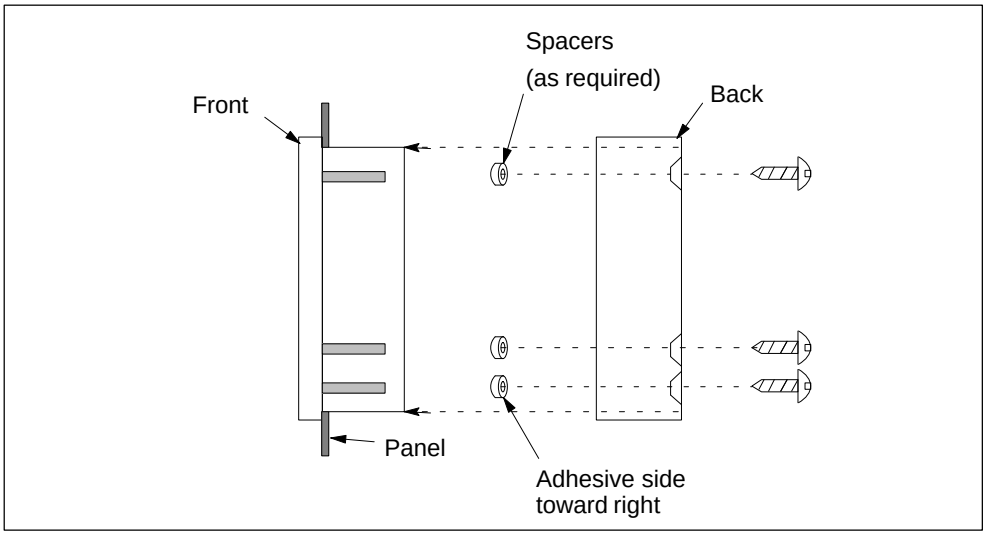

Figure 2-4 Mounting the PG 702 in a Panel

When the PG 702 case is open, take all precautions related to handling electrostatic sensitive devices as described in Section D.3.

Technical Specifications and Hardware

D

This appendix contains the technical specifications and hardware information for the PG 702. It also gives guidelines for handling Electrostatic Sensitive Devices (ESD).

D.1 PG 702 Specifications

The specifications for the PG 702 are shown in Table D-1.

Table D-1 Technical Specifications for the PG 702

PG 702 Performance Data		
Order number	6ES7–702–0AA01–0YA0	
Dimensions (H x W x D)	72 mm x 144 mm x 27 mm (2.8 in. x 5.6 in. x 1.1 in.)	
Weight	approx. 0.25kg (0.55 lb.)	
Display	STN display/ 2 lines of 20 characters each; 5 mm line height / LED backlighting / normal temperature range	
Keyboard	Silicone elastomer keyboard / 33 keys	
Programmer interface	PPI interface RS485 interface	
Supply voltage (V_N)	24VDC (1); (12VDC to 32VDC, safety extra-low voltage) The PG 702 has no integral protection against high-energy spurious pulses in the µs range (surge). If no relevant protective measures are provided for the power supply, a surge arrester should be connected in series.	
Current consumption (I_N)	Typically 70 mA, max. 100 mA at V_N = 24 V (no fuse in the PG 702)	
Degree of protection	IP 30	
Safety		
VDE regulation	VDE 0805 ≡ EN 60950 ≡ IEC 950	
Noise emission	<45dB(A) to DIN 45635 (no fan)	
Emitted interference Limit class	 B	 to VDE 0875,T11 ≡ ×EN55011
Electromagnetic Compatibility (EMC)		
Conducted interference on DC supply lines	±2kV ±1kV (2) ±2kV (2)	(to IEC 801–4; burst) (to IEC 801–5; µs pulse/line to line) (to IEC 801–5; µs pulse/line to ground)
Noise immunity on signal lines	±1kV	(to IEC 801–4;burst)
Immunity against discharge of static electricity	±6kV ±8kV	Contact discharge (to IEC 801–2; ESD) Air discharge (to IEC 801–2; ESD)
Immunity against high-frequency noise interference	10V/m with 80% amplitude modulation for 1 kHz, 10 kHz to 80 Mhz (to IEC 801–6)	

Table D-1 Technical Specifications for the PG 702

PG 702 Performance Data	
Climatic Conditions	
Temperature Operating Storage/transport	Tested to DIN IEC 68–2–1, DIN IEC 68–2–2 ± 0° C to +45° C (32° F to +113° F) – 20° C to +60° C (- 4° F to +140° F)
Relative humidity Operating Storage/transport	Tested to DIN IEC 68–2–3 5% to 95% at 25° C (77° F); no condensation 5% to 95% at 25° C (77° F); no condensation
Mechanical Environmental Conditions	
Vibration Operating	Tested to DIN IEC 68–2–6 10 Hz to 60 Hz, amplitude of 0.075mm 60 Hz to 500 Hz; acceleration of 9.8m/s^2
Shock	Tested to DIN IEC 68–2–27 Half-sine: 100m/s^2 (10g), 1ms
Special Features	
Quality assurance	To ISO 9001
Maintenance	Maintenance-free (no battery)
Installation in panels	No accessories required for installation in panels

(1) The 24 VDC supply voltage should be limited to a rated current of $\leq$ 3A by means of either an overcurrent limiter or a fuse.

(2) Only in connection with additional measures, such as overvoltage diverters, e.g. of Messrs. Dehn, type RZ/E 24V–, Order No. 917 024.

D.2 Programmer Cable (PPI Interface for the PG 702)

Figure D-1 shows the PPI interface.

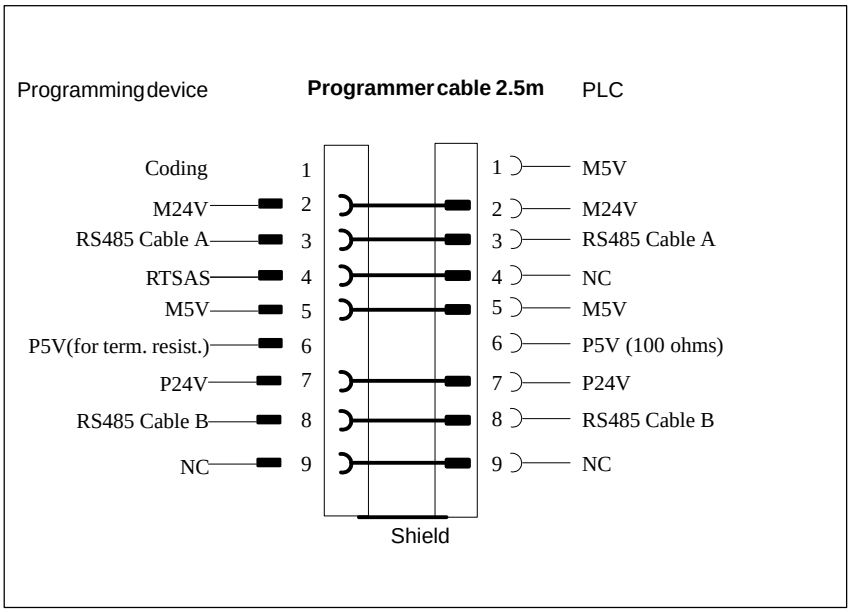

Figure D-1 PPI Interface

D.3 Handling Electrostatic Sensitive Devices (ESD)

What is an ESD?

Almost all SIMATIC/TELEPERM modules are equipped with large-scale integrated ICs or components with MOS technology. Due to their design, these electronic elements are very sensitive to overvoltages and thus to any electrostatic discharge. These **E**lectrostatic **S**ensitive **D**evices are commonly referred to by the abbreviation **ESD**.

The symbol below appears on cabinets, racks or packings to point out the use of electrostatic sensitive devices and that the respective modules are sensitive to contact with any person.



ESDs are subject to voltages and energies far below the range that can still be perceived by human beings. These voltages are present even if you touch a component or module without previously being electrostatically discharged. In most cases, the damage caused to components by such overvoltages is not immediately noticeable and results in failure only after a prolonged period of time.

An electrostatic discharge is

- perceptible from 3500 Volt
- audible from 4500 Volt
- visible from 5000 Volt

A fraction of these voltages is capable of destroying or damaging electronic devices.

Handling PG 702 When the Case is Open for Installation

- If possible, avoid any contact with electrostatic sensitive devices. Hold modules without touching the pins of components or printed conductors.
- Touch electrostatic sensitive devices only in the following cases:
  - If you wear a wristband complying with ESD specifications
  - If you use special ESD footwear or ground straps attached to your shoes when walking on an ESD floor.
- Before working on electronic devices, first discharge your body by simply touching a conductive, grounded part (e.g. bare metal parts of cabinets, water pipes, etc.).
- Protect the modules against contact with chargeable and highly insulating materials, such as plastics, insulating table tops or clothes made of plastic fibers.
- Place the modules only on conductive surfaces (tables with ESD surface, conductive ESD foam plastic, ESD bags, ESD containers).
- Avoid direct contact of electrostatic sensitive devices with visual display units, monitors or TV sets.

D.4 Approbation

Radio Interference Suppression

Manufacturer's/Importer's Certification
This is to certify that the **PG 702 programming device**, 6ES7702-0AA01-0YA0, EAN 41 25515 16 1189, is interference-suppressed (to limit class B) in compliance with regulations 1046/84 and 483/86 laid down by the German Federal Ministry of Post and Telecommunications, as well as the German DIN VDE 0875T.11/7.92 standard (5DIN EN 55011 5 CISPR 11). Radio and television reception can be impaired if components and devices not conforming with these regulations are used. The Federal (German) Approvals Office for Telecommuncations (BZT) has been notified of the introduction of this device and permission was given to verify compliance of the series with the regulations. SIEMENS AG

Supplementary Note on Interference Suppression

Any other devices connected to the product in question must also be interference-suppressed in conformity with regulation no. 1046/84 or 243/91 of the German Federal Ministry of Post and Telecommunications or guideline 89/336/EWG issued by the European Community. Products complying with these regulations are provided with the manufacturer's certificate or a certificate issued by the Federal (German) Approvals Office for Telecommunications (BZT), or a CE mark. Products that do not fulfill the relevant stipulations require an individual approval by the Federal (German) Approvals Office for Telecommuncations (BZT).