Introduction

1

1.1 Preface

Purpose of the documentation

This equipment manual contains a compact description of the module-specific information on the following devices:

Device	**Article number**
PROFIBUS bus connector plug with/without PG socket up to 12 Mbaud	6ES7972-0BA12-0XA0 6ES7972-0BB12-0XA0
PROFIBUS bus connector plug up to 1.5 MBaud	6ES7972-0BA30-0XA0
PROFIBUS bus connector plug with/without PG socket up to 12 Mbaud	6ES7972-0BA42-0XA0 6ES7972-0BB42-0XA0
PROFIBUS FastConnect bus connector with/without PG socket up to 12 Mbaud	6ES7972-0BA52-0XA0 6ES7972-0BB52-0XA0
PROFIBUS FastConnect bus connector with/without PG socket up to 12 Mbaud	6ES7972-0BA61-0XA0 6ES7972-0BB61-0XA0
PROFIBUS FastConnect bus connector with/without PG socket up to 12 Mbaud	6ES7972-0BA70-0XA0 6ES7972-0BB70-0XA0

The system-related functions are described in the respective system manuals. All system-spanning functions are described in the function manuals.

Bus cable assembly

Note

Connection of the bus lines

The bus lines are connected using an insulation displacement system (Fast Connect). The insulation displacement terminals are designed to withstand 10 terminating cycles. If you want to reconnect a line that has already been connected, you must first cut it off.

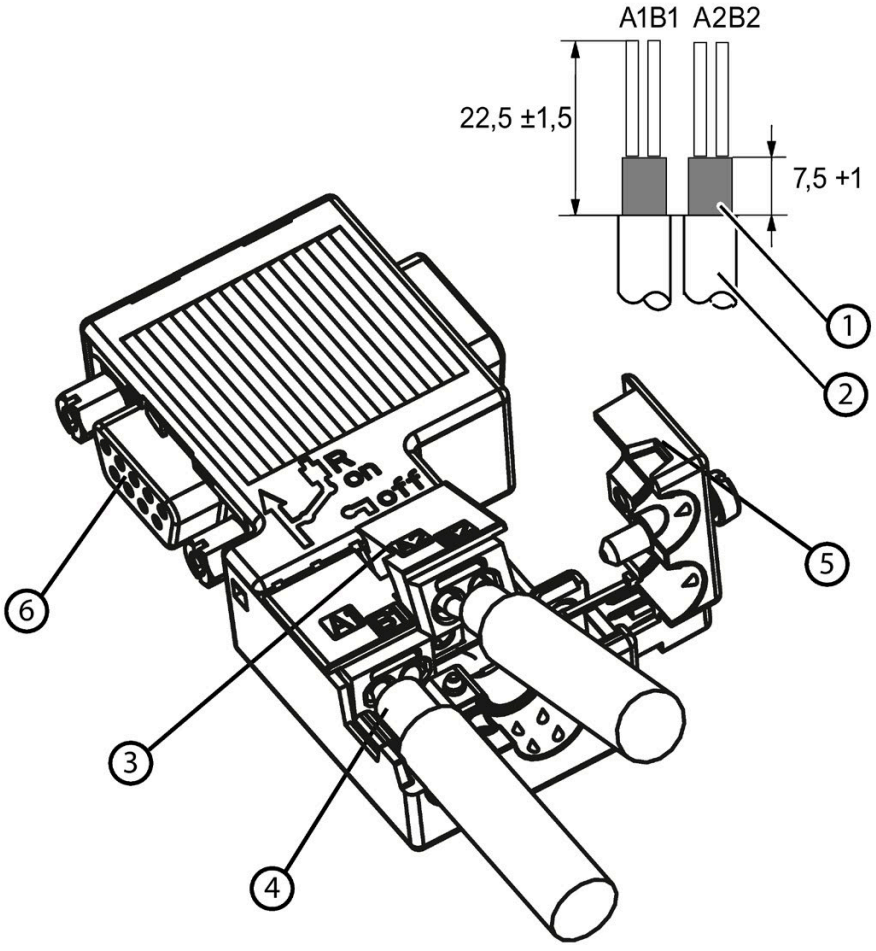

No.	Description
1	Cable shield
2	Bus cable (e.g. 6XV1 830-0EH10) - strip insulation, e.g. with stripping tool 6GK1905-6AA00
3	Contact cover for insulation displacement terminal - Insert the green and red wires into the open contact cover. - Close contact cover (wires are pressed into insulation displacement terminal)
4	Cable shield must be bare on the metal guide
5	Close strain relief and screw down
6	PG socket (only for 6ES7972-0BB70-0XA0)

Note

Do not pull the mounted bus cable to open the contact cover!

Bus connection for the first and last station on the PROFIBUS

Cable must always be connected on the left (see marking A1, B1), switch position must be "ON" for the first and last station on the PROFIBUS. (terminating resistor switched on).

Note

If the switch is set to ON, the PROFIBUS to the other stations is disconnected at this point (e.g. for service purposes).

Bus connection for all other stations on the PROFIBUS

Cable feed must always be connected on the left (see marking A1, B1). Cable continuation must always be connected on the right (see label A2, B2). Switch position must be "OFF" for all other stations on the PROFIBUS. (terminating resistor switched off).

⚠ WARNING

Danger to life from live parts

- Explosion hazard - Do not disconnect circuit while power is present unless area is known to be non-hazardous.
- Explosion hazard - Replacement of components may adversely affect approval for Equipment Group I, Category 2 or Zone 2.
- This device is approved for operation in Equipment Group I, Category 2, Groups A, B, C, D; Equipment Group I, Zone 2; Equipment Group IIC or non-hazardous locations.

Article number	6ES7972-0BA70-0XA0	6ES7972-0BB70-0XA0
Accessories		
belongs to product		SIMATIC DP
Connection method		
Design of electrical connection for network components/terminal equipment	9-pin sub D connector	9-pin sub D connector
Design of electrical connection for PROFIBUS cables	Integrated insulation displacement contacts for 2-core PB FC installation cables	
Programming device socket	No	Yes
FastConnect cable design	Yes	Yes
Number of electrical connections for PROFIBUS lines	2	2
Number of electrical connections for network components and terminal devices	1	1
Mechanics/material		
Type of terminating resistor	Resistor combination integrated and connectable via slide switch. Isolation function: When resistor is connected, outgoing bus is disconnected	Resistor combination integrated and connectable via slide switch
Interlock design	Screwed joint	Screwed joint
Outgoing feeder type	90 degree cable outlet	90 degree cable outlet
Material of housing	plastic	plastic
Material property		
• Silicone-free	Yes	Yes
Strain relief	Yes	Yes
Dimensions		
Width	15.8 mm	15.8 mm
Height	72 mm	72 mm
Depth	36.4 mm	36.4 mm
Weights		
Weight (without packaging)	34 g	45 g
Scope of supply		
Delivery quantity in pieces	1	1