31000 and 32000 Proximity Probe Housing Assemblies

Datasheet

Cordant™

141610 Rev. R

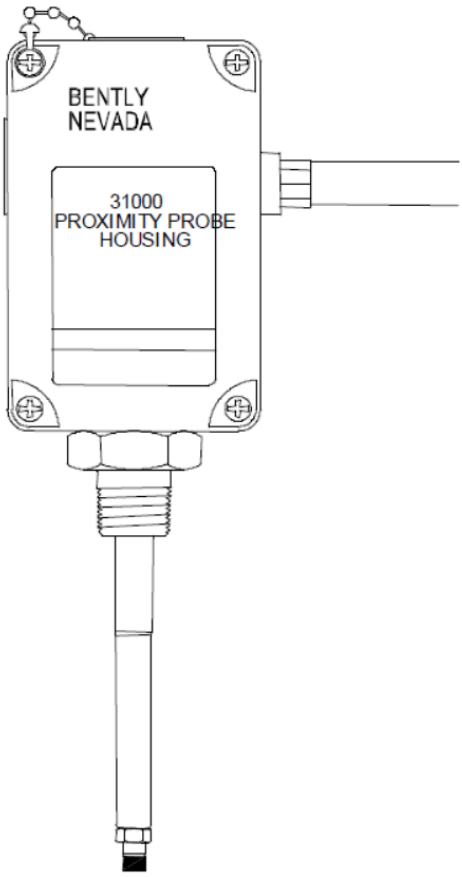

Description

The 31000/32000 Proximity Probe Housing Assemblies are recommended when mounting proximity probes through the machine case and are typically used for radially mounted transducers, whether vibration or Keyphasor measurements.

When using these housings to measure radial vibration, ensure that the machine casing is affixed to the bearing in order to get an accurate relative vibration signal.

When measuring shaft axial position with dual proximity probes, use housing 21022 instead. Consult datasheet (document 141601).

Use of a Proximity probe housing allows external access to the proximity probe and its extension cable, permitting gap adjustment or probe replacement without disassembly of the machine. The 31000/32000 Proximity Probe Housing Assembly is made of polyphenylene sulfide (PPS), an advanced, high-strength, thermoplastic with excellent corrosion resistance. Other elements of the housing assembly are made of corrosion-resistant stainless steel. The housing can be ordered with installed 3300 XL Proximity Probes and a variety of conduit fittings.

The 31000/32000 Proximity Probe Housing Assembly is fully compliant with the American Petroleum Institute's (API) 670 Standard for externally mounted proximity probe housings.

When installed in conjunction with an approved transducer system and appropriate I.S. barriers, the 31000/32000

Baker Hughes

Proximity Probe Housing Assembly can be used in intrinsically safe hazardous area applications.



The 31000/32000 Housing is intended to provide mechanical and environmental protection only, and is not an explosion-proof housing. When an explosion proof proximity probe housing assembly is required, use housing CA21000 or CA24701. Consult the datasheet (document 141600).

Related Documents

For probe information, refer to the following manuals:

- *3300 XL 8mm & 3300 5mm Proximity Transducer System User Guide* (document 141078)
- *3300 XL NSv Proximity Transducer System User Guide* (document 147357)
- *3300 XL 11mm Proximity Transducer System Installation* User Guide (document 146255)
- *Radiation Resistant Probe and Proximitor System* (document TW8029407)

Specifications

Environmental

3300 XL 8 mm Probe	
Operating and storage	-51°C to +177°C (-60°F to + 351°F)
3300 XL 11 mm Probe	
Operating and storage	-51°C to + 177°C (-60°F to + 351°F)
3300 NSV Probe	
Operating	-34°C to +177°C (-30°F to + 351°F)
Storage	-51°C to +177°C (-60°F to +351°F)

Hot Water and Steam Exposure Effects

(Specification not guaranteed). Brief periods (up to one week) of contact with hot water (95°C [203°F]) and/or condensing steam should not significantly affect the strength of the plastic housing. Contact with these beyond this length of time may eventually cause the strength of the plastic housing to permanently decrease during the first 6 to 8 weeks of exposure, and then level at approximately half of its initial value. Tests of actual housing performance after contact with hot water and condensing steam have not been conducted.

Probe Pressure

The 31000/32000 Proximity Probe Housing Assembly is designed to seal differential pressure between the probe tip and the housing main body when used with a 3300 XL 8 mm probe. The sealing material internal to the probe case consists of a Viton O-ring; the O-ring between the sleeve and the housing is a Neoprene O-ring. The plastic housing is certified to seal against hose-directed water according to NEMA 4X and IP66 standards but is not designed to resist internal or external pressure. Probes are not pressure tested prior to shipment. Contact our custom design department if you require a test of the pressure seal for your application.

It is the responsibility of the customer or user to ensure that all liquids and gases are contained and safely controlled should leakage occur from a Proximity Probe Housing Assembly. Solutions with high or low pH values may erode the tip assembly of the probe, causing media leakage into surrounding areas. Bently Nevada, LLC, does not be held responsible for any damages resulting from leaking Proximity Probe Housing Assemblies. In addition, Proximity Probe Housing Assemblies and 3300 XL 8 mm proximity probes does not be replaced under the service plan due to probe leakage.

Mechanical

Protection Ratings	Type 4X rating certified by Canadian Standards Association (CSA). IP66 rating verified by SC115582-1 (e) 106. CENELEC standard EN50014 rating for electrostatic dissipation of a plastic material located in a hazardous area.
Housing Material	Glass-reinforced Polyphenylene Sulfide (PPS) thermoplastic containing conductive fibers
Sleeve Material and Retaining Chain	AISI 304 stainless steel
Outer Sleeve and Exterior Screws	AISI 303 stainless steel

O-Ring Material	Neoprene
Recommended Torque(retaining nut)	29.4 N·m (260 in·lb)
Housing Strength (typical)	Outer sleeve was mounted on a test stand with its axis parallel to horizontal and the housing mounted on the outer sleeve through an end hole. The housing supported 912 N (205 lb) placed approximately 38 mm (1.5 inches) from the unsupported end with the cover fastened in place and grounding liner installed.
Housing Impact Strength	Certified by BASEEFA to withstand two separate 4 Joule (3.0 ft·lb) impacts at -39°C (-38°F) and at 115°C (239°F). Samples of the housing and cover were verified by CSA to withstand a 7 Joule (5.2 ft·lb) impact at ambient room temperature.
Weight	1.2 kg (2.6 lb) typical

Ordering Information

For the detailed listing of country and product-specific approvals, refer to the *Approvals Quick Reference Guide (108M1756)*.

For additional technical documentation, please log in to bntechsupport.com and access the Bently Nevada Media Library.

Table 1: Maximum "C" Option plus "D" Option for different "B" Options (probe cable length)

Probe Cable Length	Maximum C plus D
0.5 meter	394 mm (15.5 in)
1.0 meter	760 mm (30.0 in)

Table 2: Maximum "C" Option plus "D" Option for different "B" Options (probe cable length) where P/N and S/N Label on Probe Cable is visible outside of probe sleeve

Probe Cable Length	Maximum C plus D with Visible P/N and S/N Label
0.5 meter	64 mm (2.5 in)
1.0 meter	483 mm (19.0 in)

Conduit fittings are necessary when hardline conduit or metal tubing is brought into the housing. Flexible conduit should be ordered with integral 3/4-14 NPT fittings and do not require additional conduit fittings with the housing. If using flexible conduit, order the "E" = 00 option.

English Proximity Probe Housing Assemblies

31000 - AA-BB-CC-DDD-EE-FF

A: Probe with Connector	
00	Probe not required
16	3300 XL 8 mm probe
26	3300 XL NSv probe
27	3300 XL NSv probe, multiple approvals
28	3300 XL 8 mm probe, multiple approvals
29	3300 XL 8 mm probe, with connector protector
30	3300 XL 8 mm probe, with connector protector, multiple approvals
31	3300 XL NSv probe with connector protector
32	3300 XL NSv probe with connector protector, multiple approvals
33	3300 XL 11 mm probe
34	3300 XL 11 mm probe, multiple approvals
35	3300 XL 11 mm probe with connector protector
36	3300 XL 11 mm probe with connector protector, multiple approvals
B: Probe Cable Length	
00	Probe cable not required (Option A must also be 00)
05	0.5 m (20 in)
10	1.0 m (39 in)
C: Standoff Adapter Length (Option C Dimension)	

	Must be ordered if Standoff Adapter Length option is not 00.
15	Minimum length 1.5 in (38 mm)
75	Maximum length 7.5 in (191 mm)
	Recommendation Order in increments of 0.5 in (13 mm)
	Examples 1.5 in (38 mm) = **15** No standoff adapter = **00**

D: Probe Penetration Option (Option D Dimension)	
10	Minimum length 1.0 in (25.4 mm)
	Recommendation Order in increments of 0.1 in (3 mm)
	Examples No probe sleeve = **000** 3.7 in (94 mm) = **037** 22.4 in (569 mm) = **224**

"C" plus "D" dimensions greater than 12 in (305 mm) require additional sleeve support near the probe to prevent resonance from occurring. Sleeve adjustment range of Probe Penetration Option "D" is ±0.5 in (13 mm).

For probe penetration lengths between 1.0 and 2.0 inches, it may be necessary to counter bore the machine case to reduce probe side view or rear view effects.

E: Fittings	
00	Without fittings
01	One 3/4-14 NPT fitting, two plugs.
02	Two 3/4-14 NPT fittings, one plug.
03	Two plugs, one 3/4-14 NPT fitting One 3/4-14 to 1/2-14 NPT SST reducer One cable seal grip with grommets for the following cable sizes: • 1/8 to 3/16 inches • 1/4 to 5/16 inches • 5/16 to 3/8 inches
06	One 3/4-14 NPT fitting One 3/4-14 NPT to 1/2-14 NPR SST reducer Two plugs

F: Mounting Thread Option	
00	No outer sleeve, retainer, or retaining nut
02	3/4-14 NPT (Required if ordering Standoff Adapter Option).
05	7/8-14 UNF 2A

Graphs and Figures

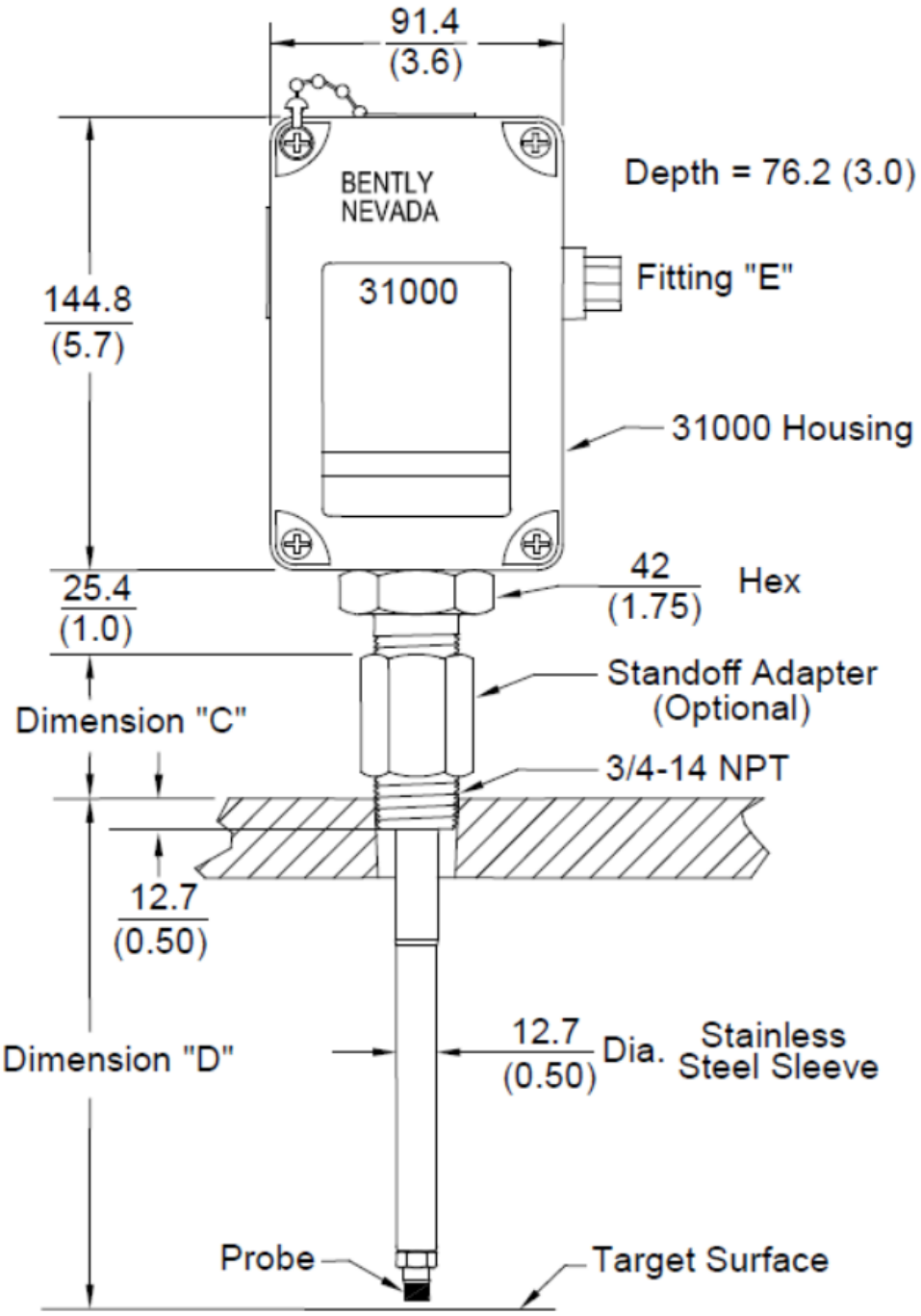

Figure 1: Dimensions for 31000 and 32000 Proximity Probe Housings

Dimensions are in millimeters (inches).

All 4 holes in housing base, 1 per side, will accept sleeve or conduit fittings and cable glands.
Fittings are supplied with housing depending on English, metric or DIN type.
Hole plugs are provided to seal unused holes.

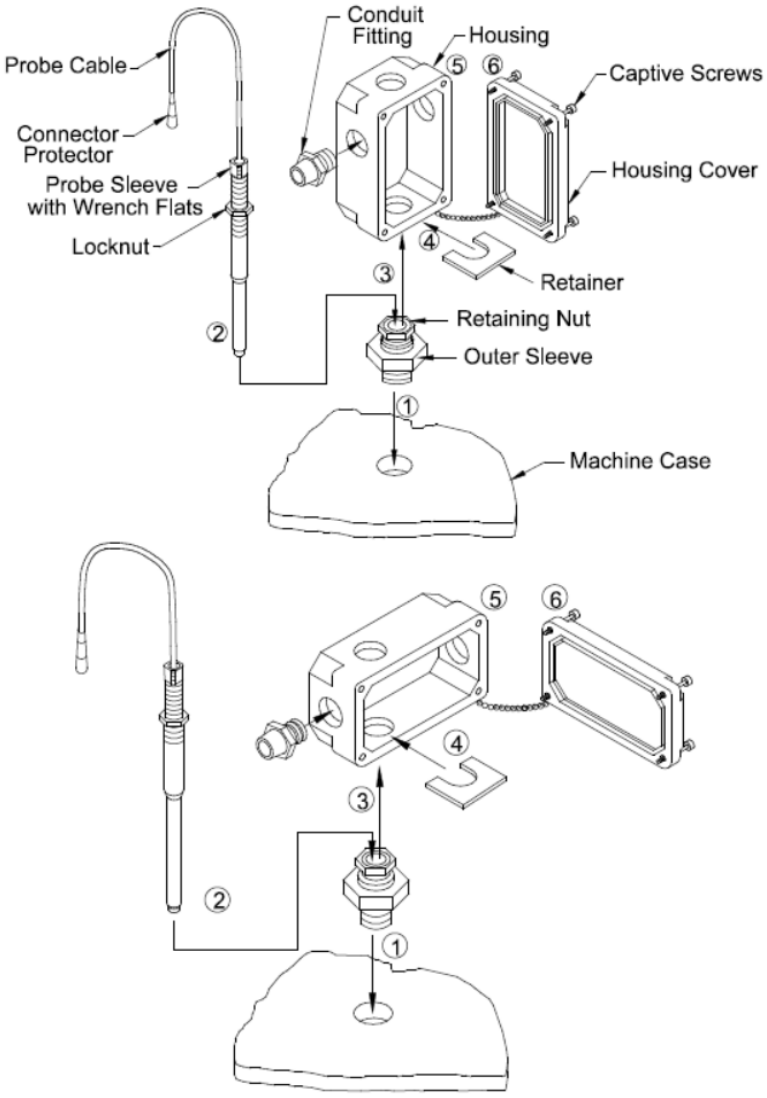

Installation Procedures

1. Install outer sleeve into machine case.
2. Insert probe sleeve and adjust probe gap.
3. Disconnect probe cable and fit housing over outer sleeve.
4. Slide retainer under retaining nut. Tighten nut.
5. Re-connect probe cable and Connector Protector.
6. Place housing cover on housing and tighten captive screws.
7. If hole plugs are used, tighten hole plug nuts to 0.5 N-m (5 in-lbs).

Figure 2: Vertical and Horizontal Profile Views of the 31000 and 32000 Proximity Probe Housings