Software versions

Software/Tool	Function	Version
OPS400-20 (high density)	Firmware	V 5.0 RA32
OPS400-00 (standard density)	Firmware	V 5.0 RA32
OPS400-60 (low density)	Firmware	V 5.0 RA32
CLV Setup	Configuration software (windows-based)	V 4.4 QF16
CLV Setup Help	Online help (HTML)	V 4.4 QF16

ATTENTION

The OPS400 is exclusively intended for use in an industrial environment.

In case of use in residential areas, RF interference may occur.

Copyright

Copyright © 2004 - 2007
SICK AG Waldkirch
Auto Ident, Reute Plant
Nimburger Strasse 11
79276 Reute
Germany

Trademarks

Windows 95™/98™, Windows NT™, Windows 2000™, Windows XP™ and Internet Explorer™ are registered trademarks or trademarks of the Microsoft Corporation in the USA and other countries.

Acrobat™ Reader™ is a trademark of the Adobe Systems Incorporated.

Latest manual version

For the latest version of this manual (PDF), see **www.sick.com**.

© SICK AG · Division Auto Ident · Germany · All rights reserved

info@apterpower.com
+86 18106909650
SOURCE PAGE 2 / 152
WHATSAPP QUOTE >

9 Technical data

9.1 Data sheet for OMNI Portal Scanner OPS400-00/-20/-60

Type	**OPS400-00** (standard density)	**OPS400-20** (high density)	**OPS400-60** (low density)
Laser diodes (wavelength)	red light (λ = 650 nm)		
MTBF of laser diodes	20,000 h		
Laser class of device	Class 2 pursuant to EN/IEC 60825-1 (for publication date, see the warning sign on the device), shutoff of laser diode after 10 min[1)]		
Focus control	Autofocus or event-controlled dynamic focus control		
No. of distance configurations	max. 8		
Focus adjustment time	≤ 20 ms (typical)		
Focus trigger source	Switching inputs "Sensor 1-1 to 1-7"/ Timer		
Useable aperture angle	max. 60 (front reading window)		
Scan/Decoder frequency	600 to 1,200 Hz		
Resolution (typical)	0.25 to 1.0 mm	0.17 to 0.4 mm	0.35 to 1.2 mm
Reading ranges	See *Page 10-2*	See *Page 10-6*	See *Page 10-10*
Bar code print contrast (PCS)	≥ 60 %		
Immunity to ambient light	2,000 lx (on bar code)		
No. of bar codes per scan	1 to 12 (standard decoder), 1 to 5 (SMART decoder)		
No. of bar codes per object	1 to 20		
No. of objects per reading field	1 to 15		
Bar code types (SMART decoder)	Code 39, Code 128, Code 93, Codabar, EAN, EAN 128, UPC, 2/5 Interleaved		
Bar code length	max. 50 characters (max. 600 characters across all bar codes per internal reading interval)		
Print ratio	2:1 to 3:1		
No. of multiple reads	1 to 99		
Visual indicators	26 x LEDs		
Reading pulse	3 switching inputs (Trigger 1, 2 and 3), software trigger (data interface)		
"Host" data interface	RS 232 or RS 422/485, variable data output format		
Data transfer rate	300 to 57,600 bd		
Protocols	SICK Standard		
Physical configurations	Standalone		
"Auxiliary" data interface	RS 232, 9,600 bd, 8 data bits, no parity, 1 stop bit, fixed output format		
Switching inputs	12 digital ("Trigger 1 to 3", "INC 1 to 2", "Sensor 1-1 to 1-7" – the conditions of all inputs are indicated visually by LEDs in the connection area – optodecoupled, $U_{in\ max}$ = +30 V, non-interchangeable		
Switching outputs	– 4 digital ("Output 1 to 4") PNP, $I_{out\ max}$ = 30 mA, short-circuit-proof, variable pulse duration (10 to 990 ms/ 100 to 9,900 ms), selectable result display function – 1 relay ("Relay out"), 24 V DC: max. 1.5 A; 250 V DC: max. 0.2 A; 250 V AC: max. 1.5 A; variable pulse duration (10 to 990 ms/100 to 9,900 ms), Selectable result display function		
Cable connection	4 x PG 9 (for cables ∅ 3.5 to 8 mm), 2 x PG 11 (4 to 10 mm)		
Operating voltage/Power consumption	85 to 264 V AC (100 to 240 V AC +10 %/–15 %, 50 to 60 Hz) /typical 30 W, max. 70 W		
Housing	Steel sheeting with aluminum top and bottom, no silicon on outer surface		
1) Default setting in Reading mode for pulse modes "Switching input Trigger 1/2" and "Serial Interface"			

Table 9-1: OPS400-00/-20/-60 technical specifications

 © SICK AG · Division Auto Ident · Germany · All rights reserved

info@apterpower.com +86 18106909650 SOURCE PAGE 103 / 152 WHATSAPP QUOTE >

Type	**OPS400-00** (standard density)	**OPS400-20** (high density)	**OPS400-60** (low density)
Protection class	Class 3 (pursuant to VDE 0106/IEC 1010-1)		
Enclosure rating	IP 54/Optics IP 65 (pursuant to DIN 40 050)		
EMC tested	pursuant to EN 61000-6-2 (2001-10), EN 61000-6-4 (2001-10)		
Vibration / shock tested	pursuant to IEC 68-2-6 Test FC/ pursuant to IEC 68-2-27 Test EA		
Weight	approx. 10.7 kg		
Operating/Storage temperature	0 to +40 C/ –20 to +70 C		
Max. rel. humidity	90 %, non condensing		

Table 9-1: OPS400-00/-20/-60 technical specifications (contd.)

© SICK AG · Division Auto Ident · Germany · All rights reserved

info@apterpower.com +86 18106909650 SOURCE PAGE 104 / 152 WHATSAPP QUOTE >

9.2 Dimensional drawing of OPS400

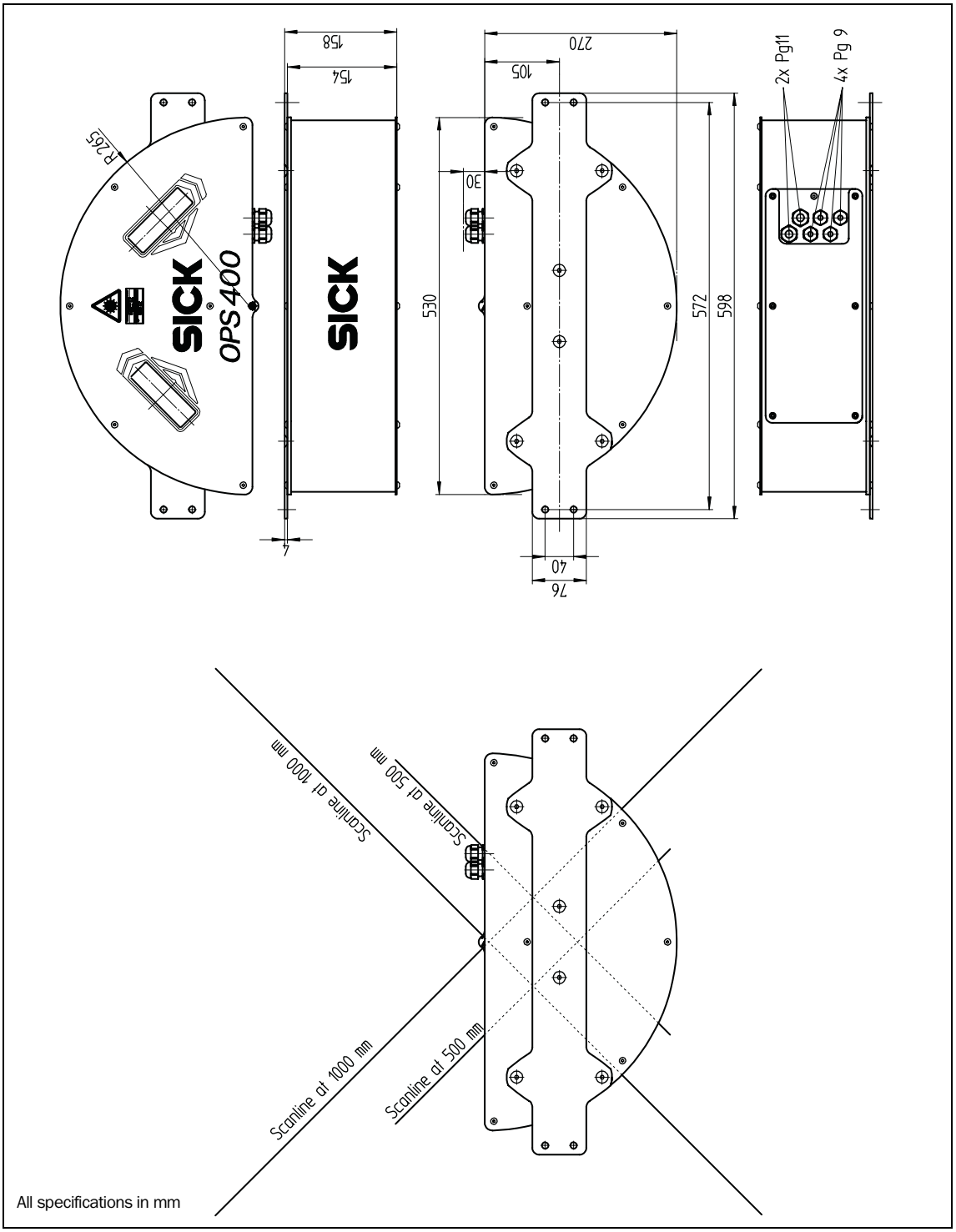

Fig. 9-1: Dimensions of the OPS400

 © SICK AG · Division Auto Ident · Germany · All rights reserved

10.2.4 High density: Reading performance data

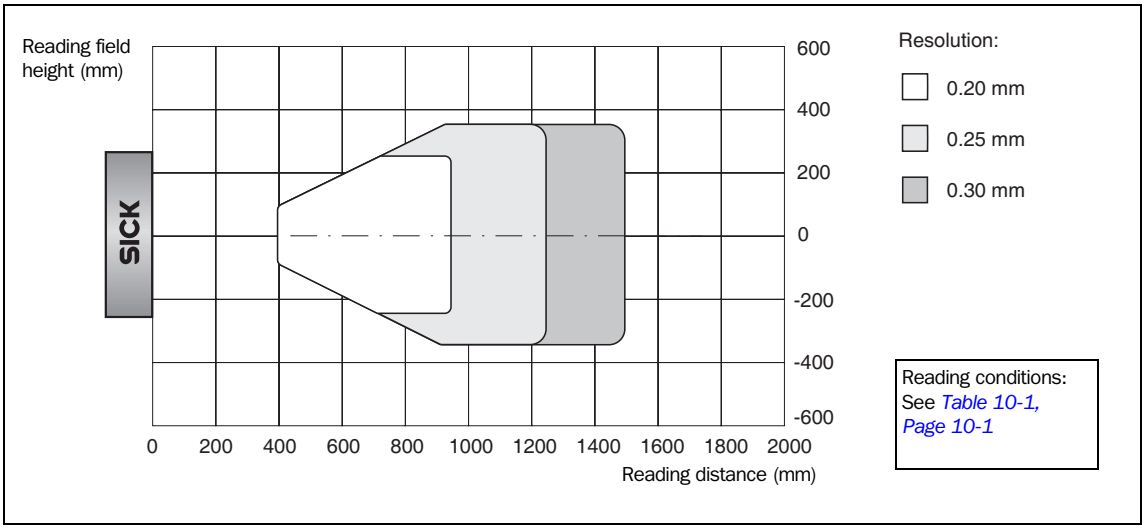

Fig. 10-6: OPS400-20 (high density): Reading field height

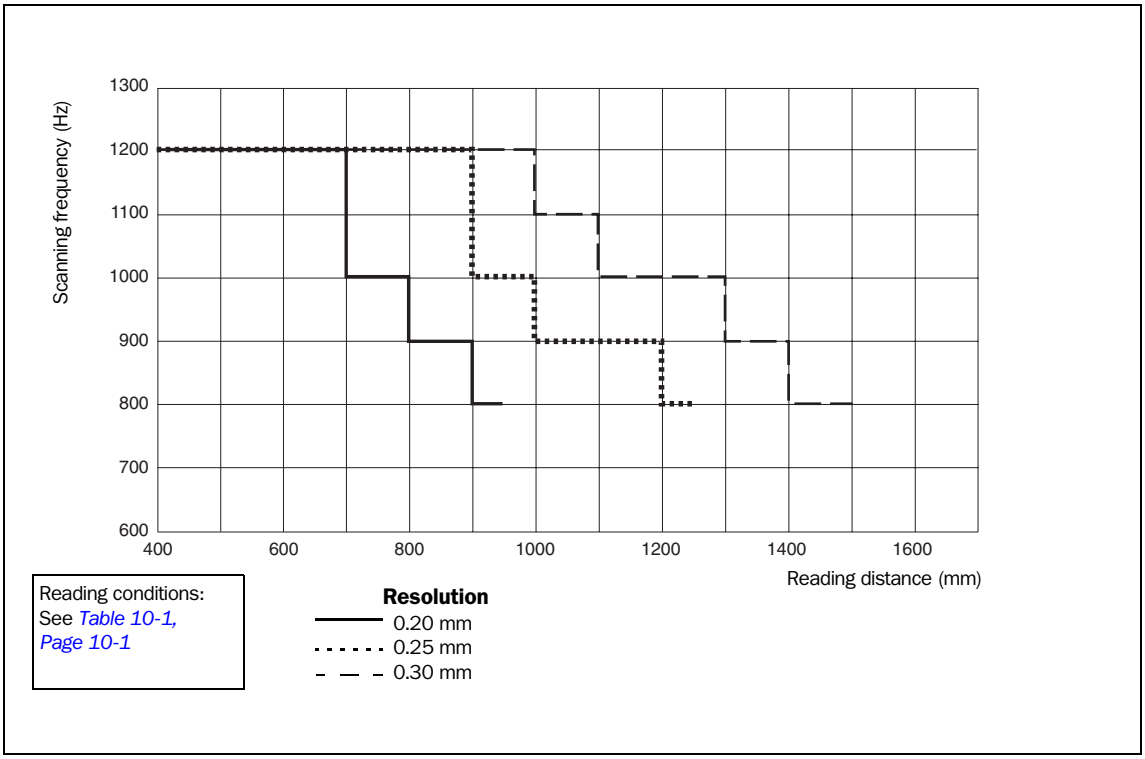

Fig. 10-7: OPS400-20 (high density): Scanning frequency characteristics

© SICK AG · Division Auto Ident · Germany · All rights reserved

info@apterpower.com +86 18106909650 SOURCE PAGE 112 / 152 WHATSAPP QUOTE >

GLOBAL INDUSTRIAL AUTOMATION SOURCING

Ready to source this part?

Ask for availability, pricing and delivery options.

Request a fast quote

Include the product title and any required part number or quantity.

EMAIL

info@apterpower.com

PHONE

+86 18106909650

CHAT ON WHATSAPP >

SCAN TO CHAT ON WHATSAPP

PRODUCT: OPS400-20 / OPS400 High-Density OMNI Portal Scanner

The enclosed manufacturer pages are reproduced without alteration to technical content.

Apter Power is not an authorized distributor, reseller or representative of the products featured.

Product names, trademarks, brands and logos remain the property of their respective owners.