3701/40 ADAPT Machinery Dynamics Monitor

Datasheet

Bently Nevada Machinery Condition Monitoring

103M2037 Rev. K

3701/40 Simplex

3701/40 Duplex

Advanced Distributed Architecture Platform Technology - ADAPT

The Bently Nevada Advanced Distributed Architecture Platform Technology, or ADAPT 3701, is a family of compact, high performance safety and machinery protection and condition monitoring solutions. ADAPT products are targeted at specific assets and applications, and excel at the intensive signal processing necessary to identify early indicators of machine failure modes long before an alarm.

Description

The 3701/40 Machinery Dynamics (MD) Monitor is designed for use on a broad range of machine trains or individual casings where the sensor point count fits the monitor's channel count and where advanced signal processing is desired. The 3701/40 is optimized for intensive signal processing required on complex machinery such as gearboxes, planetary gearboxes, and roller element bearing (REB) machines as well as offering advanced measurement capabilities on conventional monitoring methods such as radial vibration, thrust position, and casing absolute vibration. The 3701/40 Dual Redundant (DR) monitor is designed for applications that require a higher level of reliability from the vibration system.

The 3701/40 has a rugged industrial design allowing it to be skid mounted close to the machine and reduce installation wiring. Its compact size provides more mounting options compared to traditional rack based solutions. It is capable of accepting a wide array of sensor types, including eddy current proximity probes, accelerometers, velocity, acceleration, dynamic pressure, Integrated Circuit Piezoelectric Sensors (IEPE), and magnetic speed pick-ups.

Bently Nevada
a Baker Hughes business

The 3701/40 is configured and validated with Bently Nevada Monitor Configuration (BNMC) software. BNMC is a simple and powerful configuration and verification software. It is ordered separately and is required for operation.

The 3701/40 MD Monitor is a self-contained device that is ordered with a single part number for either a simplex or duplex terminal base and is made up of the following major components:

Part	Quantity Required in each 3701/40
3701 Simplex Terminal Base	1
3701 Processor Module	1
3701 Input Module	1 or 2
3701 Output Module	1 or none

Part	Quantity Required in each 3701/40
3701 Duplex Terminal Base	1
3701 Processor Module	2
3701 Input Module	1 or 2
3701 Output Module	1 or none

3701/40 Overview

The 3701/40 is a robust, compact, self-contained 12-channel device with sophisticated signal processing capability and with a form-factor suitable for distribution close to machinery. It has a modular construction that allows field changing of components and is fully-configurable. It combines protection and condition monitoring (CM) in a single package. With the ability to define measurements and alarms within the monitor, it can act as a stand-alone protection and CM system. There is no need for any interaction with external software to trigger or control the monitor during operation.

The 3701/40 DR Machinery Dynamics Monitor is a compact, field mountable, vibration protection system that utilizes dual redundant processor modules.

In the DR version, each processor module is identically configured and redundantly digitizes and processes all sensor inputs, executes identical logic, and each processor module independently drives separate alarm relays.

3701 Digital Communications

The 3701/40 has two independent Ethernet physical RJ45 connections per CPU for digital communication with Bently Nevada software products hosted on network computers and plant automation systems. It uses a proprietary Ethernet protocol for communicating with System_1_Evolution software and the BNMC configuration software.

The 3701/40 includes two Ethernet ports per CPU which provide Ethernet TCP/IP communications capabilities. Standard industrial protocols are:

- Modbus TCP/IP

Modbus over Ethernet is available for connection to HMI's, unit control systems, or other plant automation equipment. The 3701 can only be configured as a server.

- Ethernet Global Data (EGD)

EGD is a GE protocol used on Mark VI and Mark Vie controllers and by GE Programmable Automation Controllers and certain 3rd party automation equipment.

3701/40 System Description

The 3701/40 monitor is powered by single or dual redundant external +24 V DC power. It consists of four main physical components: the terminal base (single or dual), one or two processor modules, one or two input modules, and an output module.

The terminal base is the mounting platform for the monitor. The different modules install into the terminal base and two pluggable field wiring termination blocks plug into the terminal base. Sensor wiring terminates on the wiring blocks and terminations for discrete inputs (Reset, Trip Multiply, etc.) terminate directly on the base but on the opposite side from sensor wiring.

The processor module is the monitor's CPU. It is the center of the logic and signal processing for the monitor.

There are two terminal base configurations:

- A simplex base, which contains 1 CPU processor card
- A duplex base which contains 2 CPU processor cards.

The use of 2 processor cards allows for redundancy for all the dynamic measurements; both processors have access to all signal channels from each input module.

The input modules are the interface to the sensors. Each input module type covers multiple sensor varieties but due to the number of sensor types there are different input modules. The input modules condition the analog sensor signals for delivery to A/D conversion on the processor module. The input modules are simple, reliable, analog circuitry but with a simple microcontroller (outside the protection path) to provide diagnostics and fault detection on each module. Buffered transducer outputs are provided at a multi-pin Dsub connector on each input module. An accessory cable is available to fan the buffered

outs to BNC or ADRE 408 Dspi compatible connectors.

The output modules are for monitor outputs such as relay contacts. At the current time only the 8-Channel Relay Output Module is available. It contains 8 programmable SPDT relays and a dedicated monitor Protection Fault (OK) Relay. Relay logic is created in the BNMC software using the graphical logic editor.

Processor Module

The processor module, or CPU module, performs A/D conversion, digital signal processing, alarm and logic processing, and communications to Bently Nevada software and plant automation systems. The CPU module employs sophisticated diagnostics and fault detection processing to enhance reliability, availability, and maintainability of the protection and monitoring system.

Input Modules

3701 Proximitor Accelerometer Velomitor (PAV) Input Module

The 3701 PAV input module is a 6-channel + Keyphasor/speed input module that interfaces to a variety of sensors such as: -24 Volt Proximitor sensors, -24 Volt 3-wire Accelerometers, Velomitors, and constant current 2-wire sensors that are compatible with the -24 Volt 2-wire Velomitor interface.

Any of the PAV's six channels (1 – 6) can be independently configured for one of the supported transducers. Each PAV supports one dedicated Keyphasor or speed measurement on channel 7 that is configurable for Proximitor sensors or magnetic pick-ups.

3701 Proximitor Accelerometer Seismic (PAS) Input Module

The 3701 PAS input module is a 6-channel + Keyphasor/speed input module that interfaces to a variety of sensors such as: -24 Volt Proximitor sensors, -24 Volt 3-wire Accelerometers, 2-wire Seismoprobes and compatible 3rd party inertial mass velocity sensors, or dynamic pressure sensors.

Any of the PAS's six channels (1 – 6) can be independently configured for one of the supported transducers. Each PAS supports one dedicated Keyphasor or speed measurement on channel 7 that is configurable for Proximitor sensors or magnetic pick-ups.

3701 Positive (PoV) Input Module

The 3701 PoV input module is a 6-channel + Keyphasor/speed input module that interfaces to a variety of positively powered sensors such as: +24 V Proximitor sensors, +24 V Interface modules, and 2 wire IEPE sensors using 3.3 mA constant current.

Any of the PoV's six channels (1-6) can be independently configured for one of the supported transducers. Each PoV supports one dedicated negatively powered Keyphasor or speed measurement on channel 7 that is configurable for Proximitor sensors or magnetic pick-ups.

The POV is intended for interfacing to industry standard 3rd party ICP sensors and also sensors that use a 3 wire (power, common, signal) positive voltage interface.

The POV is available for use with the 3701/40, 3701/44 Aeroderivative Gas Turbine Monitor, and 3701/46 Hydro Monitor.

Output Modules

3701 8-Channel Relay Output Module

The 3701 8-Ch Relay Output Module provides 8 SPDT relay outputs or 4 "virtual" DPDT outputs and a dedicated Protection Fault relay. Relay logic is user programmable in the BNMC software using the graphical logic editor. The processor module operates on the relay logic to drive relay state.

The Protection Fault relay is a normally energized SPDT relay that will de-energize on fault conditions that can compromise the monitor's availability to protect machinery. The protection fault relay is similar to a traditional OK relay but certain conditions that do not compromise protection will not cause the Protection Fault relay to de-energize.

The relays are configured for Normally De-Energized (NDE) or Normally Energized (NE) in four banks of two relays each by using switches on the relay module. The relays are set for NE for operation in the dual redundant system.

Relay wiring terminates on the output module using pluggable connectors and exits on the opposite side of the monitor from the sensor inputs.

In dual redundant operation, processor module one drives relays 1, 3, 5, and 7 and processor module two drives relays 2, 4, 6, and 8. The relay alarm logic is identical. External connection to an Emergency Shutdown Device can use a 1oo2 or 2oo2 configuration depending on the user's needs. Users are recommended to perform a system analysis using functional safety methods (IEC 61511, IEC 61508 or ISA SP84) before selecting a voting scheme.

Terminal Base

3701 Simplex Terminal Bases

The term “simplex terminal base” identifies, or distinguishes this type of terminal base as one with a single (simplex) processor module as opposed to a dual (or duplex) terminal base with two processor modules.

The 3701 simplex terminal base is the mounting and installation component of the monitor. It supports a single processor module, one or two input modules, and an output module.

The terminal base mounts to a bulkhead, or enclosure or wall sub-panel using the four mounting holes at the corners of the base. Mount vertically for optimal convection cooling.

3701 Dual Terminal Base

The Dual Terminal Base is similar in function to the Simplex Terminal Base except that it has two CPU processor modules instead of one. The extra CPU module allows the user to use the two input modules redundantly. Both CPU modules have access to all the signal channels from each of the input modules.

Terminal base features:

- Two pluggable terminal blocks provide sensor wiring terminations that are individually marked for the sensor wire type. The termination blocks can be removed for wiring ease or maintenance work and, when installed, are fixed in place with a locking mechanism.
- A dedicated connection terminal for single point connection to system earth.
- A single point earth connection switch to separate physical (chassis) earth from system common (instrument earth) to enable system common connection to an external intrinsic safety earth.
- Primary and Secondary connectors for single or redundant +24 V DC power input.
- Six discrete inputs (DI) for dedicated dry contact DIs: Trip Multiply, Alarm/Relay Inhibit, Latch Reset, Special Alarm Inhibit, Run Mode, and IP/Account reset. There are two sets of these six inputs on the dual terminal base.
- The terminal base also supports one conditioned Keyphasor/Speed output for each processor module and one input. The conditioned I/O is for connecting Keyphasors or Speed signals between two or more 3701 monitors.

Channel Types, Sensors, and Measurements

The 3701/40 Machinery Dynamics Monitor supports a set of standard channel types and the common sensors used with those channel types as well as custom configurable sensors. Support for sensor types is dependent on input module type as listed in tables located below in this datasheet section. Each channel type has default measurements that can be enabled or disabled and each channel type can have user customizable nX and bandpass measurements added to the channel and then customized to the application.

The 3701/40 can have up to 12 vibration input channels (Six per input module) and 2 Keyphasor/Sspeed inputs (one per input module). The monitor supports the channel types listed here:

- Acceleration
- Dynamic Pressure
- Radial Vibration
- Thrust Position
- Velocity
- Keyphasor/Speed

Table 1: Channel Type Support by Input Module

Input Module	Channel Types
PAS Channels 1 - 6	Acceleration Dynamic Pressure Radial Vibration Thrust Position Velocity Proximitor Speed
PAS Channel 7	Magnetic Pickup Speed Proximitor Speed (single and multi-event)
PAV Channels 1 - 6	Acceleration Dynamic Pressure Radial Vibration Thrust Position Velocity Proximitor Speed
PAV Channel 7	Magnetic Pickup Speed Proximitor Speed (single and multi-event)
PoV Channels 1-6	Acceleration Dynamic Pressure Radial Vibration Thrust Position Velocity
PoV Channel 7	Keyphasor/Speed (Proximitors, single and multi-event or Mag pickup, single and multi-event).

PAV and PAS channels 1 – 6 can also be configured to support an additional Keyphasor input provided it is a single event per revolution, less than 10,000 rpm, and uses a Proximitor sensor, but cannot be done with PoV.

Table 2: Input Module Compatibility with Acceleration Inputs

Input Module	Accelerometer or Accelerometer Interface Module
PAS	155023-01 High Freq 200g Accel I/F Module 23733-03 Accel I/F Module 24145-02 High-Freq Accel I/F Module 330400 100 mV/g Accelerometer 330425 25 mV/g Accelerometer 330450 High Temp Accelerometer 350501 Acceleration Charge Amplifier 49578-01 Accel I/F Module Custom
PAV	155023-01 High Freq 200g Accel I/F Module 23733-03 Accel I/F Module 24145-02 High-Freq Accel I/F Module 330400 100 mV/g Accelerometer 330425 25 mV/g Accelerometer 330450 High Temp Accelerometer 350501 Acceleration Charge Amplifier 49578-01 Accel I/F Module Custom
PoV	GSI 122, 124 and 127 Galvanic Interface Unit TP100 Commtest Accelerometer TP500 Commtest Accelerometer 200350 Accelerometer 200355 Accelerometer 786-500 Wilcoxon Accelerometer 626B02 PCB Accelerometer HS-170 Hansford Accelerometer HS-100F series Hansford Accelerometer CMSS-2100 SKF Accelerometer 351M35 PCB Accelerometer

Table 3: Input Module Compatibility with Velocity Inputs

Input Module	Velomitors, Seismoprobes, and Interface Modules
PAS	9200 Seismoprobe 74712 Hi Temp Seismoprobe 47633 Seismoprobe 86205 BoP Seismoprobe Custom
PAV	330500 Velomitor 330525 Velomitor XA 190501 Velomitor CT 330750 High Temp Velomitor 330752 High Temp Velomitor 330505 Low Freq Velocity Sensor 330530 Radiation Resistant Velomitor Custom
PoV	HS-160 Velocity Sensor

Table 4: Input Module Compatibility with Proximitor Sensors

Input Module	Proximitor Sensor
PAS or PAV PoV (Keyphasor)	3300XL 8 & 11 mm 3300XL NSV 3300 RAM Proximitor 3300 5 & 8 mm 3300 16 mm HTPS 7200 5, 8, 11, 14 mm Custom

Table 5: Input Module Compatibility with Dynamic Pressure Inputs

Input Module	Dynamic Pressure Sensor
PAS	3-Wire (Com/Sig/-24VDC) 350500 DPCA
PAV	3-Wire (Com/Sig/-24VDC) 350500 DPCA orPCB 102M206
PoV	2-wire PCB 121A21 2-wire PCB 121A44 2-wire PCB 121A22

Measurements

Each channel type has a set of default measurements typical of the channel type. In addition, user customizable nX vectors and bandpass measurements may be added to each channel.

The number of measurements that can be added and enabled depends on the signal processing capability of the processor module. There is no limitation, other than processor performance, to the number of measurements that can be added to a single channel or across all channels. A performance calculator in the BNMC software provides feedback during the configuration process on performance margin as measurements are added or removed and their attributes modified.

Measure	Configurable Attributes (1)
Accelerometer	
Bandpass	Full scale range Units (g's or m/s2 peak or rms; or integrated accel: in/s or mm/s peak or rms) High pass corner frequency Low pass corner frequency High pass filter order (1,2,4,6, or 8th) Low pass filter order (1, 2, 4, 6, or 8th) Clamp value (amplitude)
nX	Full scale range Keyphasor association Integer or non-integer order in increments of 0.1x from 0.1x to 100x (phase not valid for non-integer orders). Units (g's or m/s 2 peak or rms; or integrated accel: in/s or mm/s peak or rms) Clamp value (amplitude and

Measure	Configurable Attributes (1)
	phase)
Velocity	
Bandpass	Full scale range Units (in/s or mm/s peak or rms; or integrated veloc: mils or µm peak-peak or rms) High pass corner frequency Low pass corner frequency High pass filter order (1,2,4,6, or 8th) Low pass filter order (1, 2, 4, 6, or 8th) Clamp value (amplitude)
nX	Full scale range Keyphasor association Integer or non-integer order in increments of 0.1x from 0.1x to 100x (phase not valid for non-integer orders). Units (in/s or mm/speak or rms; or integrated veloc: mils or µm peak-peak or rms) Clamp value (amplitude and phase)
Bias	Low Pass Corner Frequency Clamp Value (Volts)
Radial Vibe	
Bandpass	Full scale range Units (mils or µm peak-peak or rms) High pass corner frequency Low pass corner frequency High pass filter order (1,2,4,6, or 8th

Measure	Configurable Attributes (1)
	Low pass filter order (1, 2, 4, 6, or 8th) Clamp value (amplitude)
nX	>Full scale range Keyphasor association Integer or non-integer order in increments of 0.1x from 0.1x to 100x (phase not valid for non-integer orders). Units (mils or µm peak-peak or rms) Clamp value (amplitude and phase)
Gap	Low Pass Corner Frequency Clamp Value (Volts)
Thrust Position	
Bandpass	Full scale range Units (mils or µm peak-peak or rms) High pass corner frequency Low pass corner frequency High pass filter order (1,2,4,6, or 8th) Low pass filter order (1, 2, 4, 6, or 8th) Clamp value (amplitude)
nX	Full scale range Keyphasor association Integer or non-integer order in increments of 0.1x from 0.1x to 100x (phase not valid for non-integer orders). Units (mils or µm peak-peak or rms)

Measure	Configurable Attributes (1)
	Clamp value (amplitude and phase)
Bias	Low Pass Corner Frequency Clamp Value (Volts)
Dynamic Pressure	
Bandpass	Full scale range Units (psi dpp, psi pp, psi rms, mbar dpp, mbar pp, mbar rsm) High pass corner frequency Low pass corner frequency High pass filter order (1,2,4,6, or 8th) Low pass filter order (1, 2, 4, 6, or 8th Clamp value (amplitude)
nX	Full scale range Keyphasor association Integer or non-integer order in increments of 0.1x from 0.1x to 100x (phase not valid for non-integer orders). Units (psi dpp, psi pp, psi rms, mbar dpp, mbar pp, mbar rsm) Clamp value (amplitude and phase)
Bias	Low Pass Corner Frequency Clamp Value (Volts)
Proximitor Speed	
Speed	Top Scale Clamp Value
Gap	Low Pass Filter Frequency Clamp Value (Volts)

Measure	Configurable Attributes (1)
Magnetic Pickup Speed	
Speed	Top Scale Clamp Value

(1) Technically feasible configurations depend on the interaction between many factors. Certain selections may not be feasible. Use the BNMC software to create an off-line configuration to determine technical feasibility.

Waveforms and Spectral Data

Acquisition of multiple synchronous and asynchronous waveforms can be configured for each 3701 channel in the BNMC software. These waveforms are used as the data source for extraction of measurements that require spectral data such as nX vectors and peak extractions.

Waveform configuration for spectral data consists of f_{max} and the number of lines in the spectral data.

Asynchronous spectral waveforms:

F_{max} can be set between 10 Hz and 40 kHz in 12 discrete steps. F_{min} is always at 0 Hz.

The number of spectral lines can be set from 12.5 to 3200 in 12 discrete steps.

Synchronous spectral waveforms:

Number of samples per revolution can be set from 8 to 4096.

Number of revolutions per waveform can be set from 1 to 1024.

Amplitude Extractions

An amplitude extraction is the amplitude at a user configured center frequency and with a user configured bandwidth. The band around the center frequency is limited in size and can range from a single spectral line (bucket) closest to the configured center frequency, to the center spectral line plus 5 lines on each side (11 total buckets).

The source data for amplitude extractions are asynchronous spectrums.

Multiple amplitude extractions can be configured on a single channel and across multiple channels.

Spectral Bands

Spectral bands are user configured with a start and a stop frequency and return the average energy in the band.

The source data for spectral bands are synchronous and asynchronous spectrums using either enveloped spectral or ordinary spectral data.

Multiple spectral bands can be configured on a single channel.

Applications for spectral bands and other signal processing features are described in the Applications section of this datasheet.

Alarming and Setpoints

Alert and Danger over and under alarm setpoints can be created individually for each measurement. Additionally, alarm attributes such as enable/disable, alarm time delay (ATD), and latching/non-latching can be independently configured on each measurement.

In addition, the alarming attributes (enable/disable, ATD, and latching/non-latching) can be set independently on the Alert and Danger alarms on the same measurement.

Relay logic is created in the graphical relay logic editor in BNMC software by mapping the enabled alarms to OR and AND gates to drive a relay.

Individual relays can be configured as latching/non-latching or enabled/disabled independently (or in addition to) the settings on the measurement alarms.

Network Operation

The processor module supports two Ethernet RJ45 physical connections located on the terminal base. The two connectors are termed Net A and Net B and each has its own configurable IP address. All configuration and interface to Bently Nevada software as well as communication using an industrial protocol is with one or both of these connections.

Display and HMI Options

Bently Nevada offers System 1 Basic as a simple, low cost, easily installed, and light footprint HMI. System 1 Basic is part of the System_1_Evolution platform and offers a subset of System_1_Evolution functionality to provide a basic operator display.

The Modbus TCP or EGD industrial protocols can be used to serve data to an HMI where users can build display environments using standard 3rd party HMI software.

Bently Nevada Configuration Software (BNMC)

BNMC software is necessary to configure and verify the 3701/40 Machinery Dynamics Monitor.

BNMC is simple configuration software with a nominal price that is used for monitor configuration. It also has snapshot viewing of timebase waveforms (including Keyphasor/Speed) and spectrums to support commissioning and setup of the 3701 and sensor instrumentation system. Bently Nevada Monitor Configuration software will run on most Windows desktop or notebook computers and is designed and fully tested for operation on Microsoft Windows 7 and 8.1 (32 bit and 64 bit) and Microsoft Windows 2008 and 2012 Server (64 bit).

Language support at the current time is English version operating systems with keyboard preference set to English.

BNMC is ordered separately from the monitor hardware. See the spares section in the Specifications portion of this datasheet for the part number.

System_1_Evolution Connectivity

3701 monitors connect to System_1_Evolution and support current value and time-based data collection of all static values, waveforms, and spectral data. This includes System 1 software's full suite of plots and tools for conditioned monitoring and asset management.

When an event is triggered on the 3701/4x monitor, the following high resolution alarm data is forwarded to System 1 *.

Trended Measurements:

	Duration	Intervals
Pre-event Data	10 minutes	1 second
20 seconds	100 milliseconds	100 milliseconds
Post-event Data	10 seconds	
1 minute	1 second	

Spectrums/Waveforms:

	Duration	Intervals
Pre-event Data	2.5 minutes	10 seconds
Post-event Data	1 minute	10 seconds

*Requires System_1_Evolution 17.2 or newer and Firmware release 4.1 or newer for 3701/4x.

In case of network disruption between the 3701 and System 1*, the 3701 can

store up to 512MB of Alarm data and 512MB of transient data.

Applications

This section describes selected applications where 3701 function and feature offers particular benefits.

Dual Redundant Protection

A typical dual redundant protection only application has these basic elements:

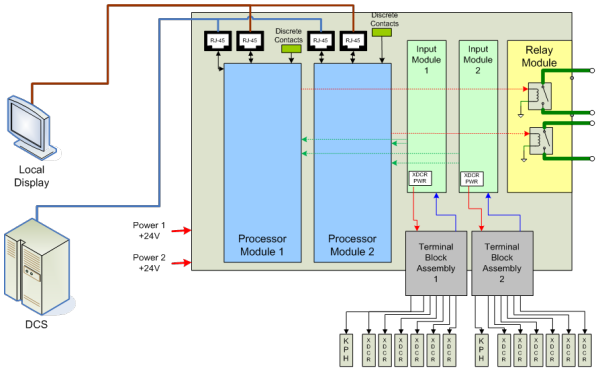

- Each processor module processes all sensor and Keyphasor input signals and has communication (Ethernet) connections only to the controls and automation system.
- Each processor is configured the same and executes identical logic.
- Processor module 1 drives relays 1, 3, 5, and 7. Processor module 2 drives relays 2, 4, 6, and 8. The same alarm logic is used for each relay pair (1, 2), (3,4) etc.
- An external shutdown system connects to relay pairs and votes 1oo2 or 2oo2 depending on application requirements.
- The dedicated protection fault relay is driven by a protection fault in either of the processor modules and is driven if one processor module is removed.
- If redundant sensors are required, they can be voted 2oo2 or 1oo2 in the 3701 processor modules.
- System configuration can be varied in a number of ways to meet different

reliability requirements. Redundant sensors can be used partially or entirely. Non-redundant sensor points, such as XY radial shaft vibration probes, on the same bearing can also be split between input modules.

- Redundant industrial protocols can operate independently from each processor module to automation and control systems.

Dual Redundant Protection with a System 1 Connection

This optional configuration operates the same as described above but Processor Module 1 connects to System 1 using one of its Ethernet ports. Cyber security is the key design element that must be addressed in this configuration.

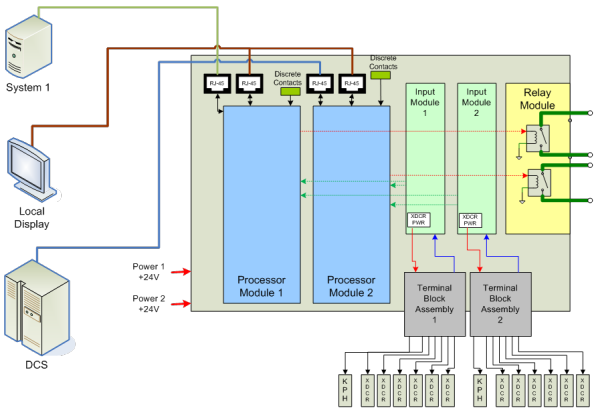

Radial Shaft Vibration, Axial Position, and Casing Vibration

3701 supports the standard industry measurements for these applications but, in addition, users can create custom measurements on these channels using spectral bands, bandpass timebase measurements, amplitude extractions, nX measurements, integrated and non-integrated, and rms or peak measurements.

Detection of certain mechanical, aerodynamic, and hydraulic, faults can be enhanced by improved measuring capability. For example, on an axial compressor there may be increased sub-synchronous axial vibration at the onset of a surge condition – a bandpass timebase measurement or synchronous spectral band measurement on an axial position probe can enhance detection of this specific fault mode.

Roller Element Bearings

Use spectral bands to focus on bearing fault frequencies. (nX measurements can also be used but the spectral band allows customizing the bandwidth to the bearing fault frequency response whereas the nX measurement is narrow band.)

Outer Race Ball Pass (ORBP)	A spectral band using synchronous enveloped or non-enveloped data can be set around the expected ORBP
Inner Race Ball Pass (IRBP)	A spectral band using synchronous enveloped or non-enveloped data can be set around the expected IRBP
Cage	A spectral band using synchronous enveloped or non-enveloped data can be set around the expected cage frequency
Ball Spin 1X	A spectral band using synchronous enveloped or non-enveloped data can be set around the expected ball spin 1X frequency
Ball Spin 2X	A spectral band using synchronous enveloped or non-enveloped data can be set around the expected ball spin 2X frequency
Overall and non-REB fault frequencies	Set one or more bandpass measurements to look at overall vibration at frequencies where rotor, casing, or structural vibrations are expected. nX measurements can also be used for rotor related vibration.
HF band	Set a spectral band using enveloped synchronous or asynchronous data sources on

	a broader high frequency band to detect low level impact events. (A simple bandpass with an appropriately set high pass filter can be configured in addition.)

Gear Boxes

There are many types of gear boxes with correspondingly different vibration monitoring needs. This short section is intended only to highlight some particular features of the 3701 system.

Feature	Description
Gear Mesh (GM) 1X, 2X, or 3X	Set a synchronous spectral band, or an nX measurement (or both) on the 1X, 2X, and 3X GM. For each gear set.
Gear Mesh Side Bands	If you know the fundamental frequency of an expected side band based on your gear kinemantics then you can set a synchronous spectral band on a specific sideband.
Enhanced measurements from Radial Vibration Proximitors	For API 613 gearboxes where XY radial vibration probes are typically specified you can set the GM related spectral bands described above as well as nX's based on hi and low speed shaft Keyphasors.
Enhanced measurements from Thrust Position Proximitors	For API 613 gearboxes where axial position probes are typically specified. Axial vibration can be measured by setting bandpass filtered or nX measurements in addition to the conventional thrust position measurement.

Gas Turbine Combustion Dynamic Pressure

Spectral bands and/or amplitude extractions as well as bandpass filtered timebase measurements can be configured to selectively monitor the different tones produced by pressure pulsations in combustion turbines.

Specifications

3701/40 Monitor Power Requirements

Input Voltage	
Minimum	18 Vdc
Maximum	36 Vdc
Non-isolated	24 Vdc nominal
Current	
(Simplex)	2.3 amps max current
(Duplex)	3.0 amps max current
Inrush Current	
3.0 amps max inrush less than 5 mS (Per processor card)	

Supply must be 2006/95/EC Low Voltage Directive compliant for CE installations.

Supply must be Class I, Div 2 or Class I, Zone 2, (CL2 SELV), compliant for hazardous area Installations.

3701/40 Processor Module Specifications

Inputs	
Maximum	12 dynamic signals and 2 Keyphasor/speed signals
Signal/Noise Ratio	110db @ 102.4 ksps
A/D Conversion	Sigma- Delta 24 bit.
Bandwidth	0.0625Hz to 40Khz

Outputs	
Two Independent Ethernet ports	Net A: 10/100 BaseT Net B: 10/100 BaseT
Buffered Signal Outputs	15 pin DSUB connector, available accessory cable for BNC and SMC options. 550 ohm output impedance
LEDs	
Module OK LED	Indicates when the module is functioning properly.
Protection Fault LED	Indicates that the monitor has experienced a fault that is affecting protection.
User Inhibit LED	Indicates that there has been a user initiated inhibit of alarming functionality.
Attention LED	Indicates a condition on the monitor has occurred that may require action.
Danger LED	Indicates a Danger condition.
Alert LED	Indicates and Alert condition.
KPH 1 OK LED	Indicates that Keyphasor signal 1 is triggering
KPH 2 OK LED	Indicates that Keyphasor signal 2 is triggering
NetA	Indicates that Network A has a valid link
TX/RX A	Indicates that network traffic is flowing on Network A.
Net B	Indicates that Network B has a valid link.
TX/RX B	Indicates that network traffic is flowing on Network B.
PWR 1 OK	Indicates that the first power

	input is functioning correctly.
PWR 2 OK	Indicates that the second power input is functioning correctly.

Accuracy

Direct pk or rms	Within ± 0.5% of full-scale typical 1.1% Worst Case
Bias	+0.4 V / -0.8 V typical +0.8V / -1.34 V Worst Case.
Tracking filters	nX tracking filters are have a bandwidth of 0.075X, where X is the speed of the associated speed channel.

Alarming

Setpoints	Over/under user configurable.
Time Delay	100mS – 60 minutes
Latching	User configurable alarming or relay latching

Input Impedance

All 3-wire Inputs (PAS & PAV)	Nominal input impedance is 10 kΩ.
2-Wire Input – PAS (Seismaprobes)	Nominal differential input impedance is 9.98 kΩ.
2-Wire Input – PAV (Velomitors)	Nominal constant current is 3.3267 mA.

Speed Signal Inputs

Speed Range	
Dedicated Speed/Keyphasor Input	1 to 120,000 rpm
Auxiliary Proximitor Keyphasor Input	1 to 10,000 rpm
Conditioned Speed/Keyphasor Input	1 to 120,000 rpm
Speed Resolution	1 to 100 rpm ± 0.1 rpm 100 to 2000 rpm ± 1 rpm
Gap	±8.2 mV typical ±22.3 mV Worst Case

Phase Accuracy	
Dedicated Speed Input	± 1 degree up to 120,000 rpm
Auxiliary Proximitor Speed Input	± 1 degree up to 10,000 RPM
Auto Threshold	Use for any input above 1 rpm for 1 event/resolution
Manual Threshold	±150mV, User selectable from +3.5 to -23.5 Vdc.
Hysteresis	User selectable from 0.2 to 10 volts.
Signal Amplitude	Minimum signal amplitude for trigger is 2 volts peak-to-peak.

Refer to Hazardous Area Special Considerations Section for Maximum Magnetic Pickup amplitude requirements for hazardous area applications.

Relay Output Specifications

Relay Type	Single Pole Double Throw (SPDT). Normally Open (NO), Normally Closed (NC), and Armature (ARM) contacts
Contact Ratings	5A/250 Vac/1500 VA Max. 5A/250 Vdc/150 VA Max.
Minimum Switching Current	12Vdc/100mA
Normally De-Energized (NDE) or Normally Energized (NE)	NDE/NE independently selectable for relay pairs 1-2, 3-4, 5-6 and 7-8.

Refer to Hazardous Area Special Considerations Section for Relay specifications when used in hazardous area applications.

3701/40 Environmental Specifications

Indoor Use Only	
Operating Temperature Range	-30° C to +65° C† (-22° F to 149° F)
	† If the 3701 is operated 100% at +65C, its life will be reduced to approximately 11 years. Any portion of the time it is operated below +65C or any convective airflow will increase its lifespan.
Storage Temperature Range	-40°C to +85°C (-40° F to 185° F)
Relative Humidity	0% to 95% rH non-condensing Operating and Storage
Vibration	5g @ 57-500 Hz. IEC 60068-2-6
Shock	15g, 11ms IEC 60068-2-27
Altitude	< 2000 m (6,562 ft)
Pollution Degree	Pollution Degree 2
Installation Category	Category II

Physical

Simplex Base Dimensions	26.7 x 20 x 18.2 cm (10.5 x 7.87 x 7.15 in)
Simplex Weight	4.5 kg (9.9 lbs)
Duplex Base Dimensions	26.7 x 27.7 x 18.2 cm (10.5 x 10.9 x 7.15 in)
Duplex Weight (fully loaded)	7.7 kg (17.1 lbs)
Mounting (Simplex and Duplex)	Bulkhead 4 mounting bolts or screws at corners.

Compliance and Certifications

FCC

This device complies with part 15 of the FCC Rules. Operation is subject to the following two conditions:

- This device may not cause harmful interference.
- This device must accept any interference received, including interference that may cause undesired operation.

EMC

EN 61000-6-2

EN 61000-6-4

EMC Directive 2014/30/EU

Electrical Safety

EN 61010-1

LV Directive 2014/35/EU

RoHS

RoHS Directive 2011/65/EU

ATEX

EN 60079-0

EN 60079-15

ATEX Directive 2014/34/EU

Cyber Security

Achilles Communications Certification Level 1

Maritime

ABS 2009 Steel Vessels Rules

1-1-4/7.7,4-8-3/1.11.1,4-9-7/13

Complies with ABS Rules for Condition of Classification, Part 1

- 2015 Steel Vessels Rules
- 2015 Offshore units and Structures

Hazardous Area Approvals

For the detailed listing of country and product specific approvals, refer to the *Approvals Quick Reference Guide* (108M1756) available from www.Bently.com.

CSA/NRTL/C

Class I, Zone 2: AEx nA nC IIC T4 Gc;
Class I, Zone 2: AEx ec nC IIC T4 Gc;
Class I, Division 2, Groups A, B, C, and D;

T4 @ Ta= -30˚C to +65˚C
When installed per drawing 100M1872

ATEX/IECEx

II 3 G
Ex nA nC IIC T4 Gc

T4 @ Ta= -30˚C to +65˚C

ATEX Special Conditions of Safe Use

- The equipment shall only be used in an area of not more than pollution degree 2, as defined in IEC 60664-1.
- The equipment shall be installed in an enclosure that provides a degree of protection of not less than IP54 and which meets the enclosure requirements of EN 60079-0 and EN 60079-7/EN 60079-15. The enclosure shall be suitable for an ambient temperature range of -30ºC to +65ºC and a service temperature of 80ºC.
- Transient voltage protection shall be provided by the external circuits to ensure that transient overvoltages to the equpment cannot exceed 140% of 85 V.

- When installed in a metal enclosure, the enclosure shall have an external facitlity for an earth bonding connection which complies with EN 60079-0:2012/A11:2013 clause 15.1.2 and which is electrically in contact with the internal earth connection facility on the equipment.
- The relay output circuits shall not be connected to circuits which exceed 30V, 5A.

Ordering Information

For the detailed listing of country and product specific approvals, refer to the *Approvals Quick Reference Guide* (108M1756) available from Bently.com.

3701/40–AA-BB-CC-DD-EE

A: Redundancy	
01	Simplex
02	Duplex
B: Input Module 1	
00	None
01	Prox/Accel/Velom
02	Prox/Accel/Seismoprobe
04	Positive Voltage Module
C: Input Module 2	
00	None
01	Prox/Accel/Velom
02	Prox/Accel/Seismoprobe
04	Positive Voltage Module
D: Output Module	
00	None
01	8 CH SPDT Relay Module
E: Approvals	
00	None (This does include the non-Hazardous area general safety certification)
01	CSA
02	ATEX/IECEx
XX	Country specific

Spares

Part Number	Description
3701/40	3701/40 Machinery Dynamics Monitor
177896-05	3701/40 Processor Module
177988-01	Prox Accel Seismic (PAS) Module
177989-01	Prox Accel Velom (PAV) Module
105M6001-01	Positive Input (PoV) Module
177897-01	3701 Output Relay Module
175794	3701 Simplex Terminal Base
177992-01	3701 Terminal Block – Standard
178372-01	3701 Terminal Block - Duplex
100M9465-01	Bently Nevada Monitor Configuration (BNMC) SW DVD

Accessories

Part Number	Description
323314-01	Buffered Output cable 15 pin D-Sub to 7 SMA connectors. (SMA connectors work with the ADRE 408)
323314-02	Buffered Output cable 15 pin D-Sub to 7 BNC connectors
324343	Nema 4 Weatherproof Housing Kit
Bently_ Manuals	Customer DVD containing all Bently Manuals, FWD, App Notes, and Install Guides in all available languages.

Graphs and Figures

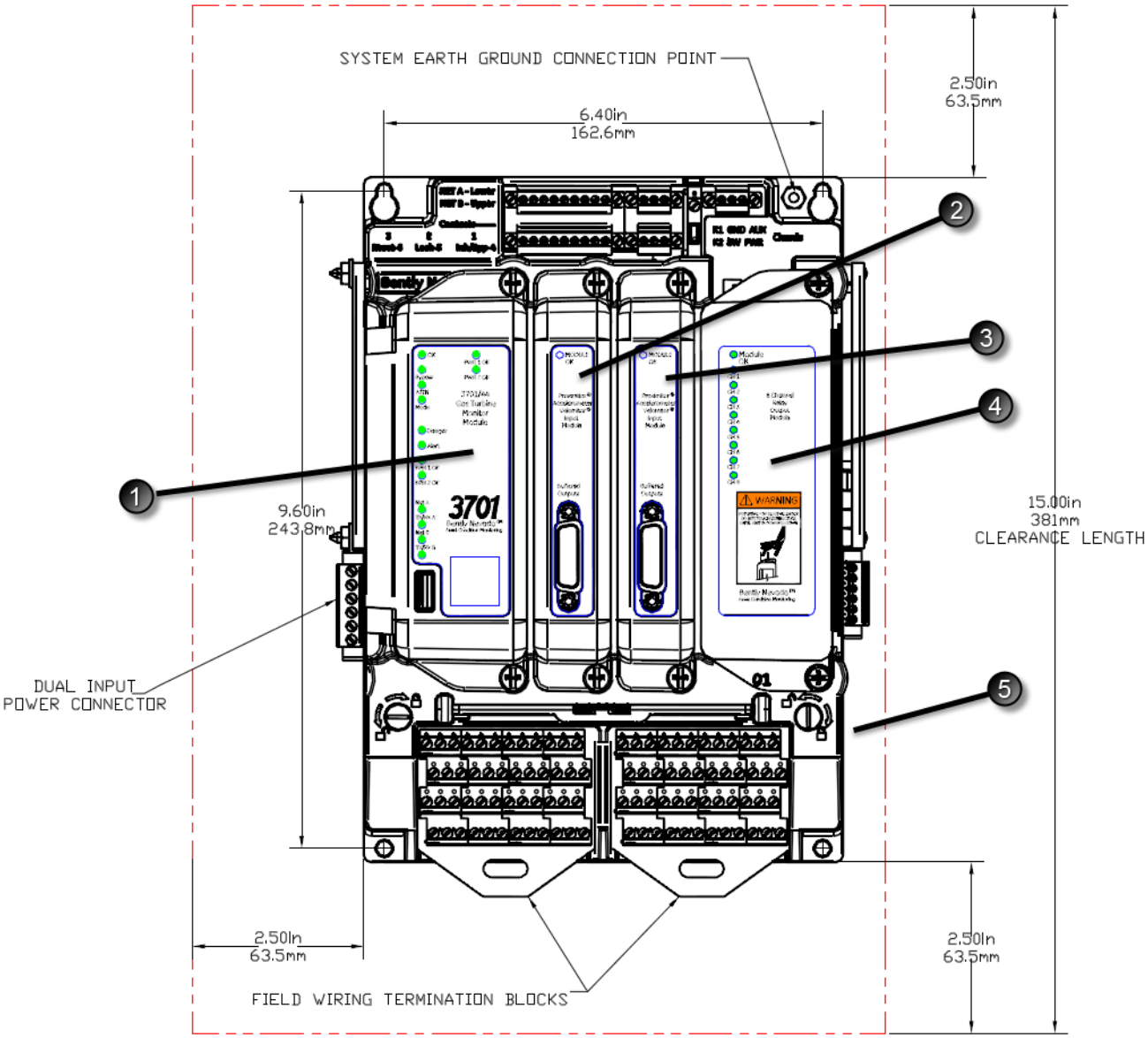

1. Processor Module
2. Input Module 1
3. Input Module 2
4. Output Module
5. Terminal Base

Figure 1: 3701/40 Simplex Terminal Base Top View

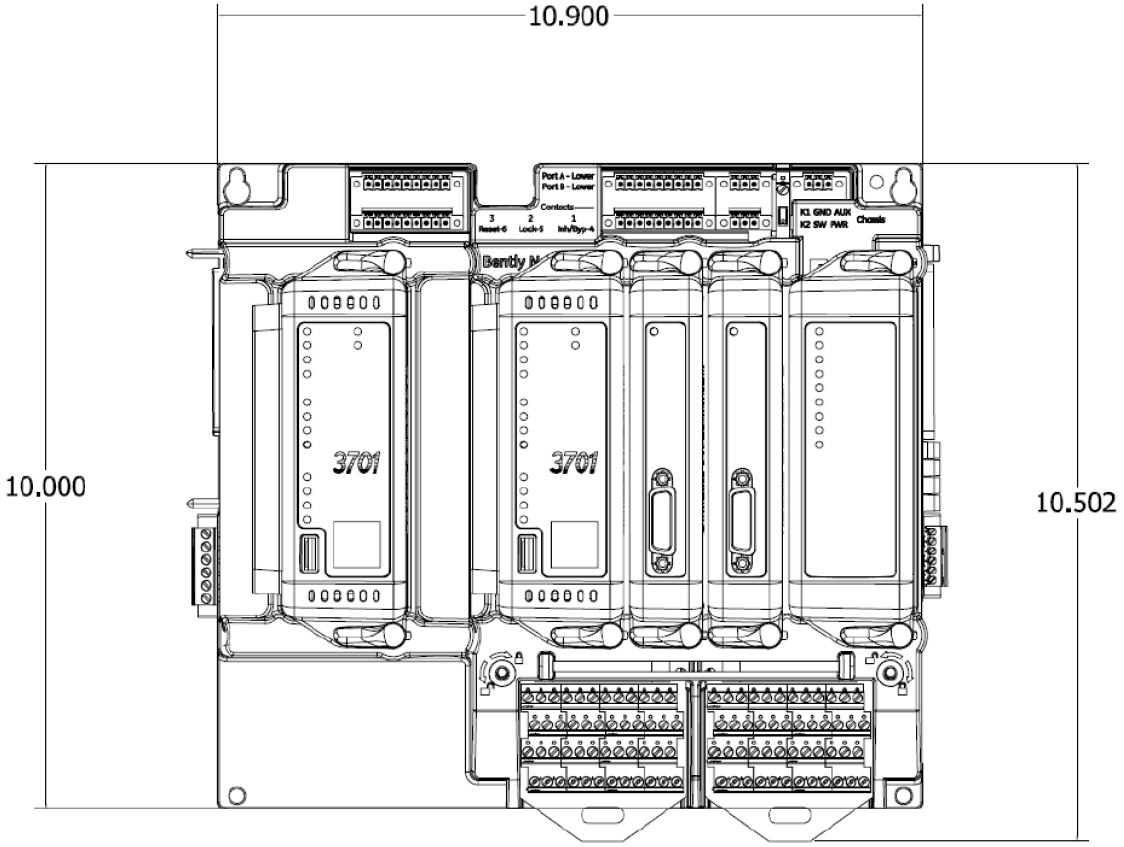

1. Processor Module (2)
2. Input Module 1
3. Input Module 2
4. Output Module
5. Terminal Base

Figure 2: 3701/40 Duplex Terminal Base Top View

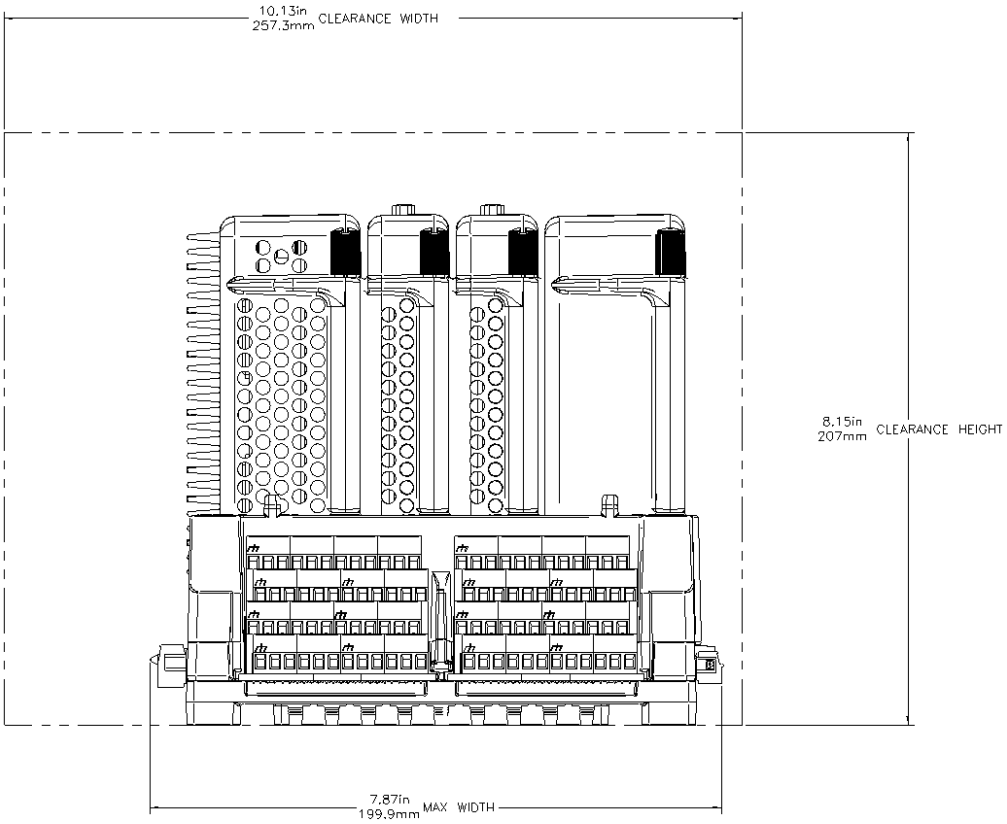

Figure 3: 3701/40 Simplex Terminal Base Side View

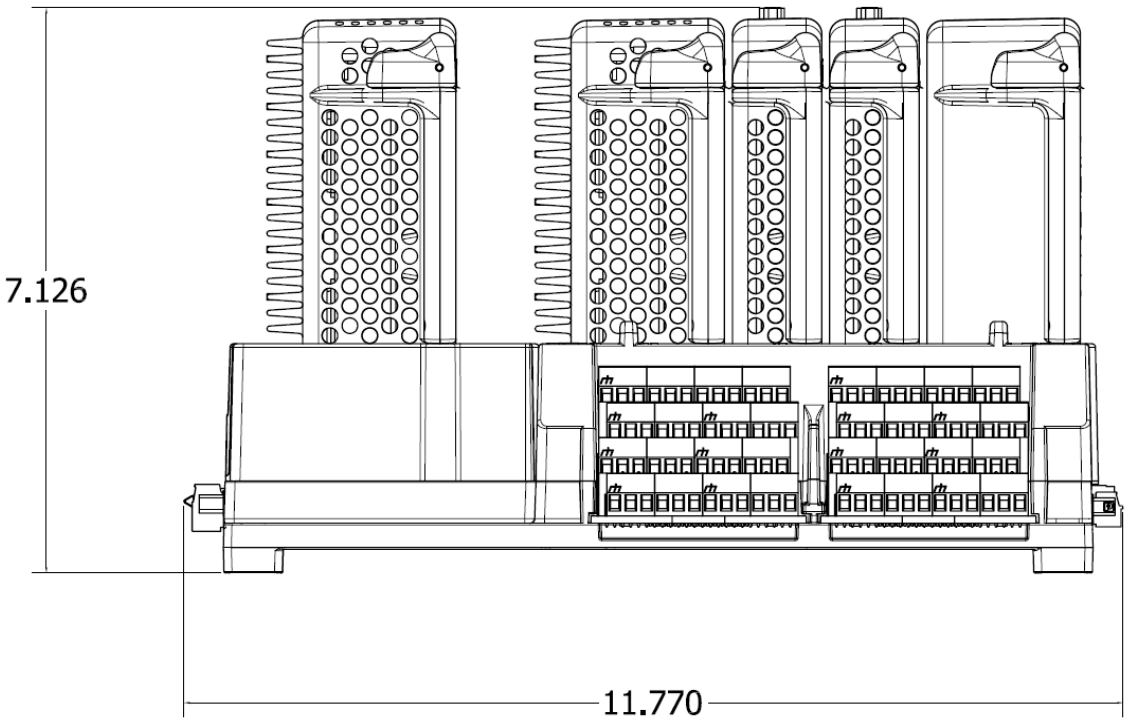

Figure 4: 3701/40 Duplex Terminal Base Side View