Operating Instructions

Edition: AD

simovert masterdrives

Active Front End (AFE)

AFE Rectifier / Regenerative Feedback Unit

Modular design for construction types E to J

SIEMENS

AC-DC

400 V/92...590 A

Contents

1 DEFINITIONS AND WARNINGS 1-1

2 DESCRIPTION 2-1

3 INITIAL START-UP 3-1

4 TRANSPORT, STORAGE, UNPACKING 4-1

5 INSTALLATION 5-1

5.1 Installing the units 5-1

5.2 Mounting dimensions and dimension sheets 5-2
5.2.1 AFE basic mains module with CleanPower filter for construction types E to J 5-2
5.2.2 Mounting dimensions of AFE reactor, construction types E to J 5-3
5.2.3 AFE inverter, construction types E to G 5-4
5.2.4 AFE inverter (construction type J) 5-8

5.3 Installing the optional boards 5-13

6 INSTALLATION IN CONFORMANCE WITH EMC REGULATIONS 6-1

7 CONNECTING-UP AND WIRING 7-1

7.1 Connection overviews 7-2
7.1.1 AFE basic mains module and CleanPower filter 7-2
7.1.2 AFE Inverter construction types E to G 7-3
7.1.3 AFE Inverter construction type J 7-4
7.1.4 Overview of core and system components for AFE functionality with example configuration 7-5

7.2 Power connections 7-9
7.2.1 AFE inverter and AFE reactor 7-9
7.2.2 Auxiliary power supply, precharging 7-10
7.2.3 Protective conductor connection 7-10

7.3 Control terminals 7-11
7.3.1 Standard connections of the AFE inverter 7-11

7.4 Connecting up control cables 7-13

7.5 Terminal assignments 7-13

7.6 Digital inputs/outputs 7-17

7.7 Voltage Sensing Board (VSB) 7-19

8 BASIC FUNCTION CHECK 8-1

9 EXPLANATION OF TERMINOLOGY AND FUNCTIONALITY OF THE AFE 9-1

10 FUNCTION DIAGRAMS 10-1

11 PARAMETERIZATION 11-1

11.1 Setting parameters via the PMU 11-2

11.2 "Start-up" parameterization 11-5
11.2.1 Function selection (P052) 11-6
11.2.2 Factory setting (P052 = 1) (Parameter reset) 11-6
11.2.3 Initialization (MLFB input) (P052 = 2) 11-7
11.2.4 Download (P052 = 3) 11-8
11.2.5 Hardware configuration (P052 = 4) 11-9
11.2.6 Closed-loop control settings (P052 = 5) 11-10

12 PARAMETER LIST 12-1

12.1 General visualization parameters 12-2

12.2 General parameters 12-4

12.3 Drive data 12-6

12.4 Hardware configuration 12-8

12.5 Closed-loop control 12-9

12.6 Functions 12-14

12.7 Setpoint channel 12-15

12.8 Control and status bit connections 12-17

12.9 Analog inputs/outputs 12-25

12.10 Interface configuration 12-27

12.11 Diagnostic functions 12-31

12.12 Gating unit 12-34

12.13 Factory parameters 12-34

12.14 Profile parameters 12-35

13 CONTROL AND STATUS WORDS 13-1

13.1 Control word 13-1
13.1.1 Display of control word on PMU seven-segment display 13-2
13.1.2 Control word 1 (visualization parameter r550 or r967) 13-3
13.1.3 Control word 2 (visualization parameter r551) 13-4
13.1.4 Sources for control words 1 and 2 13-5
13.1.5 Description of the control word bits 13-9

13.2 Status word 13-14
13.2.1 Status word 1 (visualization parameter r552 or r968) 13-14
13.2.2 Status word 2 (visualization parameter r553) 13-16
13.2.3 Description of the status word bits 13-18

14 FAULTS AND ALARMS 14-1

14.1 Faults 14-1

14.2 Alarms 14-6

14.3 Fatal errors (FF) 14-8

15 MAINTENANCE 15-1

15.1 Electrical components 15-2
15.1.1 AFE basic mains module 15-2
15.1.2 CleanPower filter 15-3

15.2 AFE inverter maintenance 15-4
15.2.1 Replacing the fan 15-4
15.2.2 Replacing the fan fuses (construction type J only) 15-5
15.2.3 Replacing the starting capacitor 15-5
15.2.4 Replacing the capacitor battery 15-6
15.2.5 Replacing the PMU 15-7

15.3 Fuses 15-8
15.3.1 Fan fuses for AFE inverters 15-8
15.3.2 DC fuses 15-8

16 FORMING 16-1

17 TECHNICAL DATA 17-1

17.1 AFE basic mains module and CleanPower filter 17-2

17.2 AFE reactor for construction types E to G 17-5

17.3 AFE reactor for construction type J 17-6

17.4 AFE inverter 17-7

18 ENVIRONMENTAL FRIENDLINESS 18-1

19 APPENDIX 19-1

1 Definitions and Warnings

Qualified personnel

For the purpose of this documentation and the product warning labels, a "Qualified person" is someone who is familiar with the installation, mounting, start-up, operation and maintenance of the product. He or she must have the following qualifications:

- Trained or authorized to energize, de-energize, ground and tag circuits and equipment in accordance with established safety procedures.
- Trained or authorized in the proper care and use of protective equipment in accordance with established safety procedures.
- Trained in rendering first aid.

DANGER

indicates an **imminently** hazardous situation which, if not avoided, will result in death, serious injury and considerable damage to property.

WARNING

indicates a **potentially** hazardous situation which, if not avoided, could result in death, serious injury and considerable damage to property.

CAUTION

used with the safety alert symbol indicates a potentially hazardous situation which, if not avoided, may result in minor or moderate injury.

CAUTION

used without safety alert symbol indicates a potentially hazardous situation which, if not avoided, may result in property damage.

NOTICE

NOTICE used without the safety alert symbol indicates a potential situation which, if not avoided, may result in an undesirable result or state.

NOTE

For the purpose of this documentation, "Note" indicates important information about the product or about the respective part of the documentation which is essential to highlight.

WARNING

Hazardous voltages are present in this electrical equipment during operation.

Non-observance of the warnings can thus result in severe personal injury or property damage.

Only qualified personnel should work on or around the equipment

This personnel must be thoroughly familiar with all warning and maintenance procedures contained in this documentation.

The successful and safe operation of this equipment is dependent on correct transport, proper storage and installation as well as careful operation and maintenance.

NOTE

This documentation does not purport to cover all details on all types of the product, nor to provide for every possible contingency to be met in connection with installation, operation or maintenance.

Should further information be desired or should particular problems arise which are not covered sufficiently for the purchaser's purposes, the matter should be referred to the local SIEMENS sales office.

The contents of this documentation shall not become part of or modify any prior or existing agreement, commitment or relationship. The sales contract contains the entire obligation of SIEMENS AG. The warranty contained in the contract between the parties is the sole warranty of SIEMENS AG. Any statements contained herein do not create new warranties or modify the existing warranty.

CAUTION

Components which can be destroyed by electrostatic discharge (ESD)

The board contains components which can be destroyed by electrostatic discharge. These components can be easily destroyed if not carefully handled. If you have to handle electronic boards, please observe the following:

Electronic boards should only be touched when absolutely necessary.

The human body must be electrically discharged before touching an electronic board.

Boards must not come into contact with highly insulating materials - e.g. plastic parts, insulated desktops, articles of clothing manufactured from man-made fibers.

Boards must only be placed on conductive surfaces.

Boards and components should only be stored and transported in conductive packaging (e.g. metalized plastic boxes or metal containers).

If the packing material is not conductive, the boards must be wrapped with a conductive packaging material, e.g. conductive foam rubber or household aluminum foil.

The necessary ESD protective measures are clearly shown again in the following diagram:

- a = Conductive floor surface
- b = ESD table
- c = ESD shoes
- d = ESD overall
- e = ESD chain
- f = Cubicle ground connection

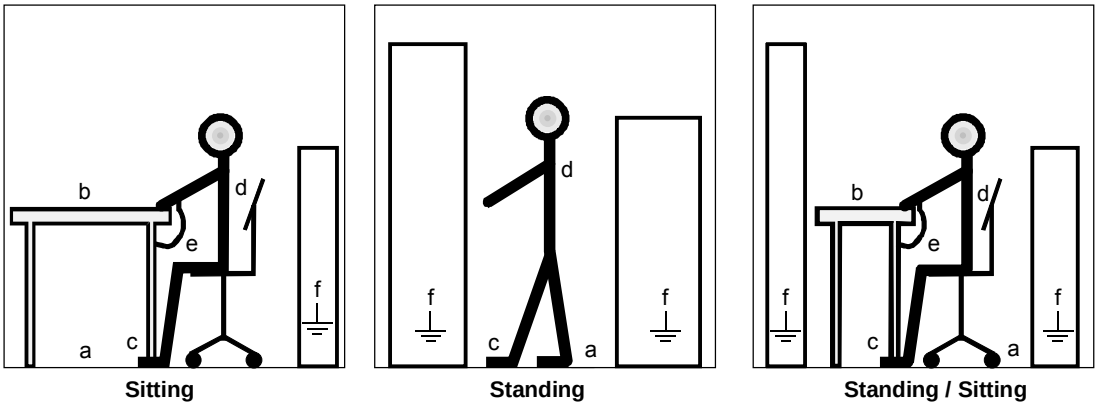

Fig. 1-1 ESD protective measures

Safety and Operating Instructions for Drive Converters

(in conformity with the low-voltage directive 73/23/EEC)

1. General

In operation, drive converters, depending on their degree of protection, may have live, uninsulated, and possibly also moving or rotating parts, as well as hot surfaces.

In case of inadmissible removal of the required covers, of improper use, wrong installation or maloperation, there is the danger of serious personal injury and damage to property.

For further information, see documentation.

All operations serving transport, installation and commissioninng as well as maintenance are to be carried out by **skilled technical personnel** (Observe IEC 60364 or CENELEC HD 384 or DIN VDE 0100 and IEC 60664 or DIN VDE0110 and national accident prevention rules!).

For the purposes of these basic safety instructions, "skilled technical personnel" means persons who are familiar with the installation, mounting, commissioning and operation of the product and have the qualifications needed for the performance of their functions.

2. Intended use

Drive converters are components designed for inclusion in electrical installations or machinery.

In case of installation in machinery, commissioning of the drive converter (i.e. the starting of normal operation) is prohibited until the machinery has been proved to conform to the provisions of the directive 98/37/EG (Machinery Safety Directive - MSD). Account is to be taken of EN 60204.

Commissioning (i.e. the starting of normal opertion) is admissible only where conformity with the EMC directive (89/336/EEC) has been established.

The drive converters meet the requirements of the low-voltage directive 73/23/EEC.
They are subject to the harmonized standards of the series EN 50178 / DIN VDE 0160 in conjunction with EN 60439-1 / DIN VDE 0660 part 500 and EN 60146 / VDE 0558.

The technical data as well as information concerning the supply conditions shall be taken from the rating plate and from the documentation and shall be strictly observed.

3. Transport, storage

The instructions for transport, storage and proper use shall be complied with.

The climatic conditions shall be in conformity with EN 50178.

4. Installation

The installation and cooling of the appliances shall be in accordance with the specifications in the pertinent documentation.

The drive converters shall be protected against excessive strains. In particular, no components must be bent or isolating distances altered in the course of transportation or handling. No contact shall be made with electronic components and contacts.

Drive converters contain electrostatic sensitive components which are liable to damage through improper use. Electric components must not be mechanically damaged or destroyed (potential health risks).

5. Electrical connection

When working on live drive converters, the applicable national accident prevention rules (e.g. BGV A2) must be complied with.

The electrical installation shall be carried out in accordance with the relevant requirements (e.g. cross-sectional areas of conductors, fusing, PE connection). For further information, see documentation.

Instructions for the installation in accordance with EMC requirements, like screening, earthing, location of filters and wiring, are contained in the drive converter documentation. They must always be complied with, also for drive converters bearing a CE marking. Observance of the limit values required by EMC law is the responsibility of the manufacturer of the installation or machine.

6. Operation

Installations which include drive converters shall be equipped with additional control and protective devices in accordance with the relevant applicable safety requirements, e.g. Act respecting technical equipment, accident prevention rules etc. Changes to the drive converters by means of the operating software are admissible.

After disconnection of the drive converter from the voltage supply, live appliance parts and power terminals must not be touched immediately because of possibly energized capacitors. In this respect, the corresponding signs and markings on the drive converter must be respected.

During operation, all covers and doors shall be kept closed.

7. Maintenance and servicing

The manufacturer's documentation shall be followed.

Keep these safety instructions in a safe place!

2 Description

The AFE (Active Front End) rectifier/regenerative feedback units belonging to the SIMOVERT MASTERDRIVES AFE series are power electronics devices that are available as cabinet units, as chassis units and as compact units.

The mounting variant (modular mains connection) described in the following section for construction types E to J is available only in the 400 V line voltage range.
The units can be operated on a 3-phase mains with or without an earthed neutral point.

- 400 V mains voltage range:
  3AC 380 V (– 20 %) to 460 V (+ 5 %)

The core component of the AFE rectifier/regenerative feedback unit consists of a voltage source converter with the CUSA control unit and it generates a controlled DC voltage, the so-called DC link voltage, from a 3-phase mains.

This DC link voltage is kept constant almost independently of the mains voltage (also in the event of regenerative feedback). The prerequisite for this is that the DC voltage setpoint is within the operating range defined below.

DC link voltage operating range

Minimum: 1.53 times the rms value of the connected mains voltage.

Explanation: the DC link voltage of the AFE inverter must at least be greater than the peak rectified value of the applied mains voltage to ensure that the power system is no longer controlled via the freewheeling diodes of the IGBT switches.

Maximum: for the 400 V mains voltage range: 740 V DC

Operating principle

On the 3-phase end, a mains angle-oriented high-speed vector control is subordinate to the DC link voltage control and impresses an almost sinusoidal current on the network so as to minimize system perturbations with the aid of the subsequently connected Clean Power filter.

The vector control also enables setting of the power factor cos phi, and thus reactive power compensation, but the operating current requirement has priority.

The VSB module (Voltage Sensing Board), functions as the network angle sensor, similarly to the principle of an encoder.

For safety reasons, an AFE rectifier/regenerative feedback unit must be connected to the mains via a main contactor; see Fig. 2-1. For this reason, an external 24 V power supply is always required to feed the VSB board and the AFE inverter.

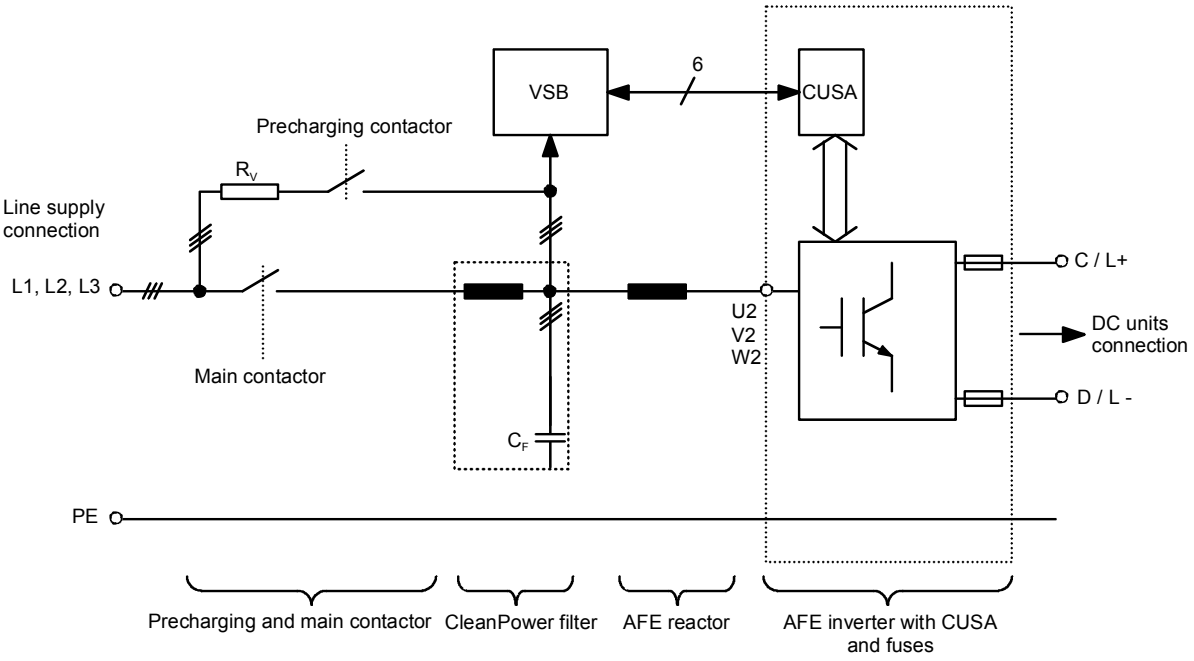

Fig. 2-1 Basic circuit

Configuration

Both one and several inverters can be connected to the output.

The maximum connected power of the inverters may amount to 4 times the rated power of the AFE inverter. The sum of active power extracted from the network must not exceed the rated power of the AFE, and this must be ensured by configuration of the system.

The AFE is suitable for coupling several inverters to a common DC busbar. This allows energy to be transferred between motoring and generating drives, thus providing a power-saving feature.

In voltage step-up mode, dips in the mains voltage can be compensated without changing the level of the DC link voltage. This can be achieved up to 65 % of rated line voltage without additional components on condition that the power balance defined by Equation 1 can be maintained.

$$\sqrt{3} \cdot V_{line} \cdot I_{max} = V_d \cdot I_d$$

Equation 1:

To bridge line voltage dips below 65 % of rated line voltage, the auxiliary power supply must be supported by an external UPS or similar to prevent the contactors from dropping out.

Operation and control options

The unit can be controlled and operated via

- the parameterization unit (PMU)
- an optional operator control panel (OP1S)
- the terminal strip
- a serial interface

In combination with automation systems, the AFE rectifier/regenerative feedback unit is controlled via optional interfaces and technology boards.

3 Initial Start-Up

Unpack and check the units	After removing the packaging, check that the unit is intact and undamaged. Only intact units may be started up. Please also check that all the necessary option boards are present and correct.	See section "Transport, Storage, Unpacking"
Fit the main components of the unit and install options that have not already been fitted	Retrofit any optional boards which have not yet been installed, if necessary. Then install the units taking into account the requirements at the point of installation and the EMC instructions.	See section "Installation" and "Installation in Conformance with EMC Regulations"
Wire the main components of the unit and connect the PE conductor and the power cables	Beginning with the PE conductor, connect the power cables and the power wiring of the AFE chokes. It is advisable to not yet connect the DC link module. Use only the included cable harnesses for further internal wiring of the main conponents. In this step, do not yet connect the control and communication cables. Exception: OP1S if the unit is to be parametrized via OP1S.	See chapters "Connecting and wiring" and "Installation in conformance with EMC Regulations"
Form the DC link capacitors, if necessary	If the unit's DC link was de-energized for more than a year, the DC link capacitors must be formed again. .	See section "Forming"
Connect the 230 V AC auxiliary voltage or the 24 V DC and the mains voltage	Note: under no circumstances must the main contactor -K1 and the precharging contactor -K4 be connected in this phase; therefore, check the unit before connecting the mains voltage. After checking the cabling for correct connection and secure attachment, connect the mains voltage or the auxiliary power supply. After the electronics power supply has been started, the unit initializes itself. The action can take several seconds. The drive status is subsequently shown on the PMU.	See chapter entitled "Basic function check"
If necessary, carry out parameter reset to factory setting	If the PMU does not show status °009 after completion of the unit initialization, or if the unit has already been parameterized before, you should carry out a parameter reset to factory setting.	See section "Parameterization"

Carry out the basic function check	**WARNING** **It must be ensured that no danger for persons and equipment can occur by energizing the power and the unit. You are advised to only connect the invertors after completing the basic function checks of the AFE rectifier/ regenerative feedback unit.**	See chapter entitled "Basic function check"

↓

Further start-up and parameterization according to your specific requirements

4 Transport, Storage, Unpacking

The units and components are packed in the manufacturing plant corresponding to that specified when ordered. A packing label is located on the outside of the packaging. Please observe the instructions on the packaging for transport, storage and professional handling.

Transport

Vibrations and jolts must be avoided during transport. If the unit is damaged, you must inform your shipping company immediately.

Storage

The units and components must be stored in clean, dry rooms. Temperatures between -25 °C (-13 °F) and +70 °C (158 °F) are permissible. Temperature fluctuations must not be more than 30 K per hour.

NOTE

If the storage period of one year is exceeded, the unit must be newly formed.

Unpacking

The packaging comprises board and corrugated paper. It can be disposed of corresponding to the appropriate local regulations for the disposal of board products. The units and components can be installed and commissioned after they have been unpacked and checked to ensure that everything is complete and that they are not damaged.

Scope of delivery type E

Line-side components and their combination:

1. AFE reactor	6SE7031-0ES87-1FG1 for 92 A AFE inverters
2. CleanPower filter	6SE7031-0EB87-1FC5 for 92 A AFE inverters
3. AFE basic mains module	6SE7031-2ED83-2NB1 (with cable harness), for 92 A AFE inverters

Scope of delivery type F

Line-side components and their combination:

1. AFE reactor	6SE703_-_ES87-1FG1 1-2: for 124 A AFE inverters 1-5: for 146 A AFE inverters 2-1: for 186 A AFE inverters
2. CleanPower filter	6SE703_-_EC87-1FC5 1-2: for 124 A AFE inverters 1-5: for 146 A AFE inverters 1-8: for 186 A AFE inverters
3. AFE basic mains module	6SE7031-8ED83-2NB1 (with cable harness), for 146 A AFE inverters for 186 A AFE inverters 6SE7031-2ED83-2NB1 (with cable harness), for 124 A AFE inverters

Scope of delivery type G

Line-side components and their combination:

1. AFE reactor	6SE703_-_ES87-1FG1 2-1: for 210 A AFE inverters 2-6: for 260 A AFE inverters 3-2: for 315 A AFE inverters 3-7: for 370 A AFE inverters
2. CleanPower filter	6SE703_-_ED87-1FC5 2-1: for 210 A AFE inverters 2-6: for 260 A AFE inverters 6SE703_-_EE87-1FC5 3-2: for 315 A AFE inverters 3-7: for 370 A AFE inverters
3. AFE basic mains module	6SE7033-7ED83-2NB1 (with cable harness), for 370 A AFE inverters 6SE7033-2ED83-2NB1 (with cable harness), for AFE inverters from 210 A to 315 A

Scope of delivery type J

Line-side components:

1. AFE reactor	6SE7036-0ES87-1FG1
2. CleanPower filter	6SE7036-0EE87-1FC5,
3. AFE basic mains module	6SE7036-0ED83-2NB1 (with cable harness),

These can be combined as standard with both the

510 A AFE inverter: 6SE7035-1EJ80,

and the

560 A AFE inverter: 6SE7036-0EJ80.

Also possible as an application, combination with 590 A with 1.5 times overload.

Fig. 4-1 shows diagrams and photographs of the electrical components contained in the modules. The AFE function can therefore be implemented very quickly when these components are combined with the appropriate supply and fusing elements.

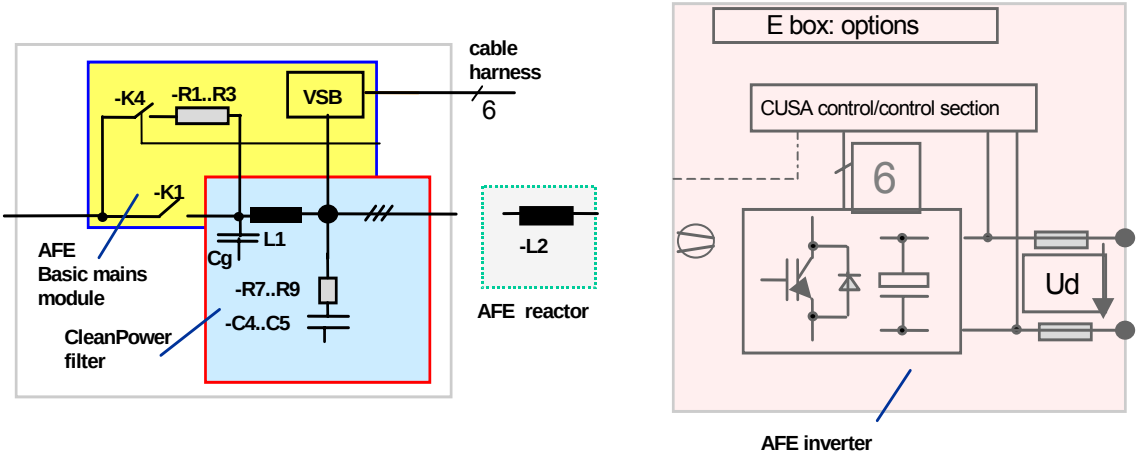

AFE basic mains module: 6SE703_-_E_83-2NB1
CleanPower filter: 6SE703_-_EE87-1FC5
AFE reactor: 6SE703_-_ES87-1FG1

AFE inverter: 6SE703_-_E_80
6SE703_-_EJ80

Weights: see chapter "Technical Data"
Dimensions: WxHxD see chapter "Technical Data"

Fig. 4-1 Overview

These are the **core components** of the AFE function. They are available only from Siemens A&D.

You will also need other peripheral **system components** such as main switch, fuses, power supply, etc., but these are available anywhere in the world and can be ordered to suit your own requirements. You can find our recommendations with respect to peripheral system components in the technical data and in the sections dealing with electrical connections.

5 Installation

5.1 Installing the units

WARNING

Safe converter operation requires that the equipment is mounted and commissioned by qualified personnel taking into account the warning information provided in these Operating Instructions.

The general and domestic installation and safety regulations for work on electrical power equipment (e.g. VDE) must be observed as well as the professional handling of tools and the use of personal protective equipment.

Death, severe bodily injury or significant material damage could result if these instructions are not followed.

NOTE

MASTERDRIVES components are designed in accordance with degree of protection IP20 or IBXXB in accordance with EN 60529 and as open-type devices to UL 50, thus providing protection against electrical shocks. In order to also ensure protection against mechanical and climatic stresses the components have to be operated in housings/cabinets/rooms that are designed according to the requirements of' EN 60529 and classified as enclosure type to UL 50.

Clearances

When you position the AFE inverter, make sure that the DC link connection is on the upper side of the unit and the AFE reactor connection is on the bottom side of the unit.

The AFE basic mains module and the CleanPower filter must always be mounted vertically (never sideways).

To ensure a free flow of cooling air when components are installed in a control cabinet, they must be mounted at a distance of 350 mm from the base (for air inlet) and 350 mm from the reflective cabinet ceiling (for air outlet).

The cabinet ventilation system must be dimensioned according to the level of heat loss. Further information can be found in the technical data.

Requirements at the point of installation

- Foreign particles
  The units must be protected against the ingress of foreign particles as otherwise their function and operational safety cannot be ensured.
- Dust, gases, vapors
  Equipment rooms must be dry and dust-free. Ambient and cooling air must not contain any electrically conductive gases, vapors and dusts which could diminish the functionality. If necessary, filters should be used or other corrective measures taken.
- Ambient climate
  The built-in units must only be operated in an ambient climate conforming to DIN IEC 721-3-3 Class 3K3. Derating will be required with cooling air temperatures of more than 40 °C (104 °F) and installation altitudes above 1000 m to ensure adequate cooling of the AFE inverter.

5.2 Mounting dimensions and dimension sheets

5.2.1 AFE basic mains module with CleanPower filter for construction types E to J

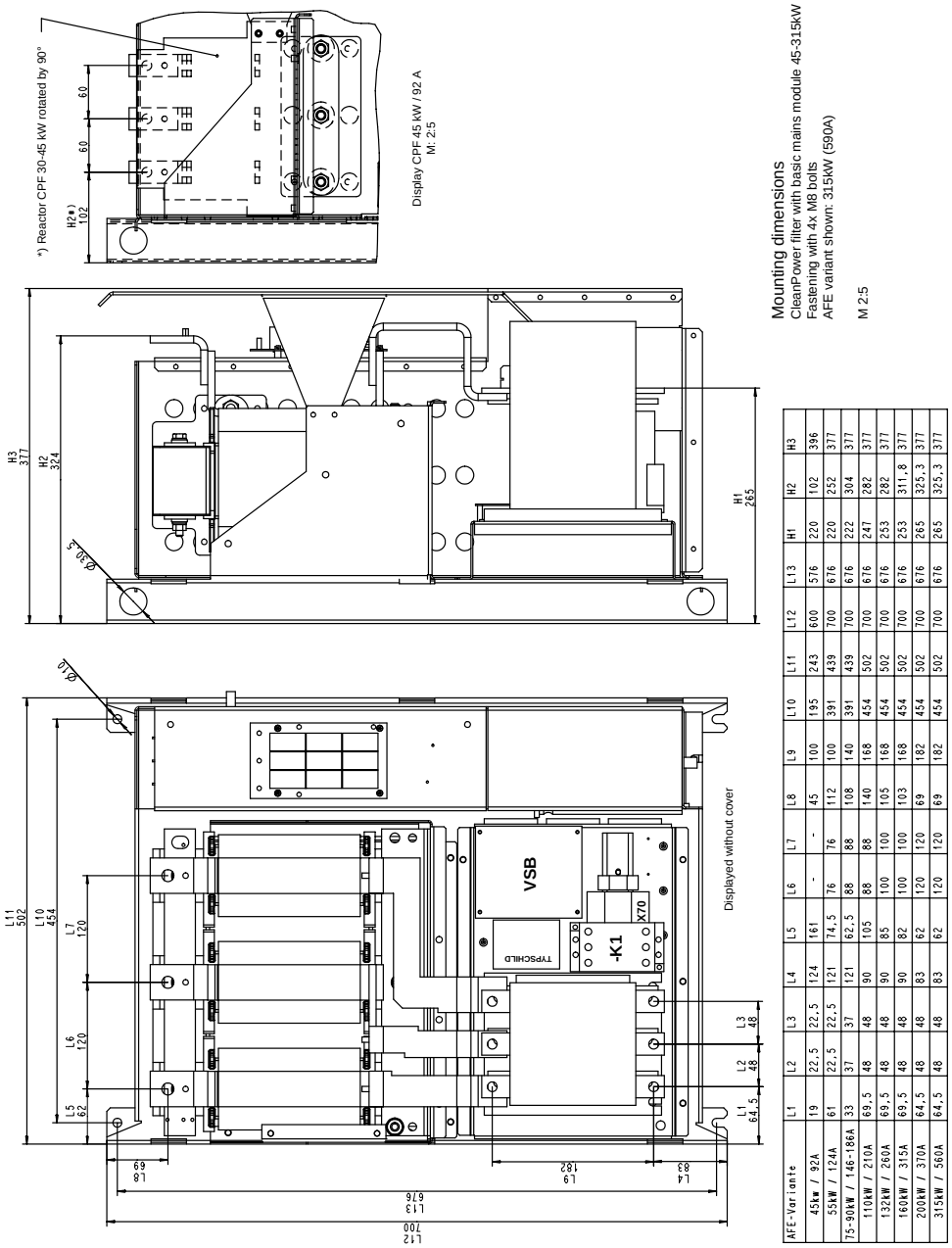

AFE-Variante	L1	L2	L3	L4	L5	L6	L7	L8	L9	L10	L11	L12	L13	H1	H2	H3
45kW / 92A	19	22,5	22,5	124	161	-	-	45	100	195	243	600	576	220	102	396
55kW / 124A	61	22,5	22,5	121	74,5	76	76	112	100	391	439	700	676	220	252	377
75-90kW / 146-186A	33	37	37	121	62,5	88	88	108	140	391	439	700	676	222	304	377
110kW / 210A	69,5	48	48	90	105	88	88	140	168	454	502	700	676	247	282	377
132kW / 260A	69,5	48	48	90	85	100	100	105	168	454	502	700	676	253	282	377
160kW / 315A	69,5	48	48	90	82	100	100	103	168	454	502	700	676	253	311,8	377
200kW / 370A	64,5	48	48	83	62	120	120	69	182	454	502	700	676	265	325,3	377
315kW / 560A	64,5	48	48	83	62	120	120	69	182	454	502	700	676	265	325,3	377

Fig. 5-1 Example of construction type J: Mounting dimension AFE basic mains module with CleanPower filter

NOTE The dimensions of construction type G differ only with respect to reactor and main contactor (see Appendix).

Mounting Screws: 4 x M8 screws
Round hole at top, slot guide at bottom.

5.2.2 Mounting dimensions of AFE reactor, construction types E to J

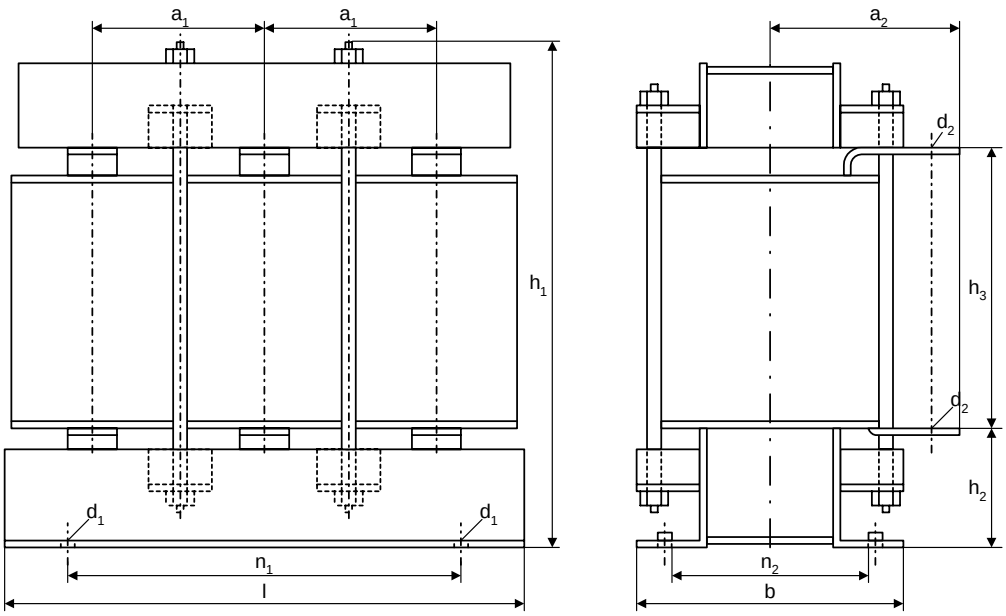

Fig. 5-2 Dimension drawings of AFE reactors

Current [A]	Voltage [V]	l [mm]	b [mm]	n_1 [mm]	n_2 [mm]	h_1 [mm]	h_2 [mm]	h_3 [mm]	a_1 [mm]	a_2 [mm]	d_1	d_2
510...590	480	540	276	320	235	500	--- *)	--- *)	175	191	M12	M12
370	480	480	276	400	227	380	95	200	160	185	M12	M12
315	480	480	276	400	220	380	95	200	160	185	M12	M12
260	480	420	204	316	170	384	87	228	140	153	M10	M12
186...210	480	420	204	316	170	384	87	228	140	153	M10	M12
146	480	355	193	264	155	335	78	195	120	136	M10	M8
124	480	355	178	264	140	340	82	190	120	106	M10	M8
92	480	300	177	240	145	267	62	166	100	106	M10	M8

*) The connecting lugs on this type of AFE reactor are at the top right and left, therefore no dimensions h2 and h3!

Table 5-1 Fixing dimensions of reactors

Fig. 5-3 AFE reactor 6SE7036-0ES87-1FG1

5.2.3 AFE inverter, construction types E to G

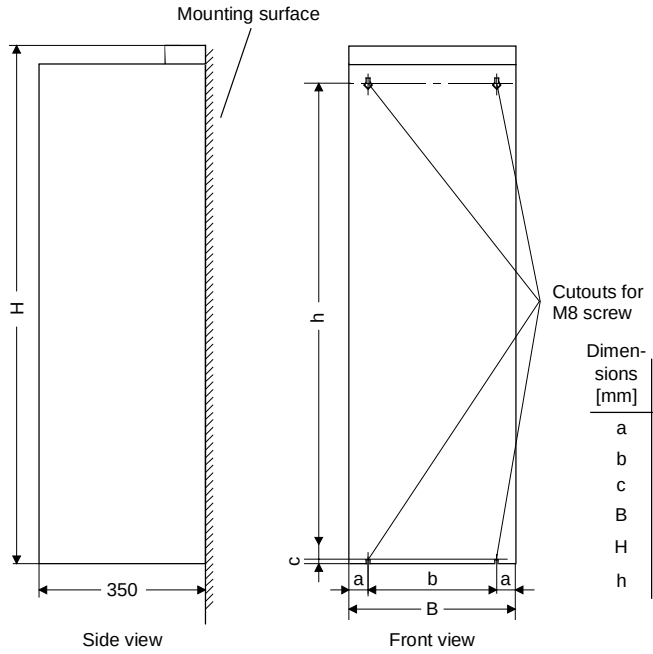

Dimensions [mm]	Type E	Type F	Type G
a	45	45	119
b	180	270	270
c	25	25	25
B	270	360	508
H	1050	1050	1450
h	1025	1025	1375

Fig. 5-4 Mounting dimension, construction types E, F and G

Partition measures

Door/roof openings

An underpressure is created in the openings of the cabinet doors due to the flow of air. This is dependent on the volumetric flow and the hydraulic cross-section of the openings.

The flow causes a build-up (over) pressure in the roof or in the top cover.

As a result of the difference in pressure between the overpressure at the top and the underpressure at the bottom of the cabinet, a flow of air is created inside the unit, a so-called arcing short-circuit. This can be stronger or weaker depending on the volumetric flow and the door/roof opening cross-section.

As a result of the flow inside the unit, air which is already pre-heated enters the heat sinks which causes an excessively high component temperature rise. In addition, a different, more unfavourable operating point is set for the fan.

If the units are operated with an arcing short-circuit, this will result in the failure of the units or in their destruction!

An arcing short-circuit must be prevented by the provision of partitions.

The switch cabinets adjacent to the inverter cabinets must also be taken into consideration in this case.

Partitions should be executed up to the cabinet frame and should be designed in such a way that the discharged air flow is taken around the cabinet beams and not pressed into them.

Partitions are necessary with all types of protection higher than IP20.

Opening cross sections

The necessary **opening cross sections** are 0.26 m^2.

The indicated opening cross-section is made up of several holes. In order to keep the pressure loss here to a minimum, the cross-sectional surface has to be **at least 280 mm^2 per hole** (e.g. 7 mm x 40 mm).

The opening and hole cross-sections ensure functioning even with high types of protection.

These are implemented by using wire-lattices (wire fabric DIN 4189-St-vzk-1x0.28) in front of the openings or the filters indicated in the following. If finer filters are used, the filter surface and thus the opening cross-section (upwards) have to be adapted accordingly.

If filters are used, the intervals for their replacement must be observed!

Filters

The following filter mat is approved for use:
FIBROIDELASTOV made by DELBAG-Luftfilter GMBH

Technical filter data in accordance with DIN 24185:

Design		FIBROID ELASTOV 10
Filter class		EU 2
Volumetric flow V	$(m^3/h) \times m^2$	2500 - 10000
Initial pressure difference Δp_A	Pa	9 - 46
End pressure difference Δp_E	Pa	300
Average degree of separation	%	72
Dust storage capability	g/m^2	-
Fire behaviour (DIN 53438)		F1/K1
Heat resistance max.	°C	80
Humidity resistance (rel. humidity)	%	100

Dimensions: 1000 x 1500 x 10 mm
Order No.: 16 065 81

Manufacturer:
DELBAG-Luftfilter GMBH
Holzhauser Strasse 159
D-13509 Berlin 27
Telephone: (030) 4381-0
Fax: (030) 4381-222

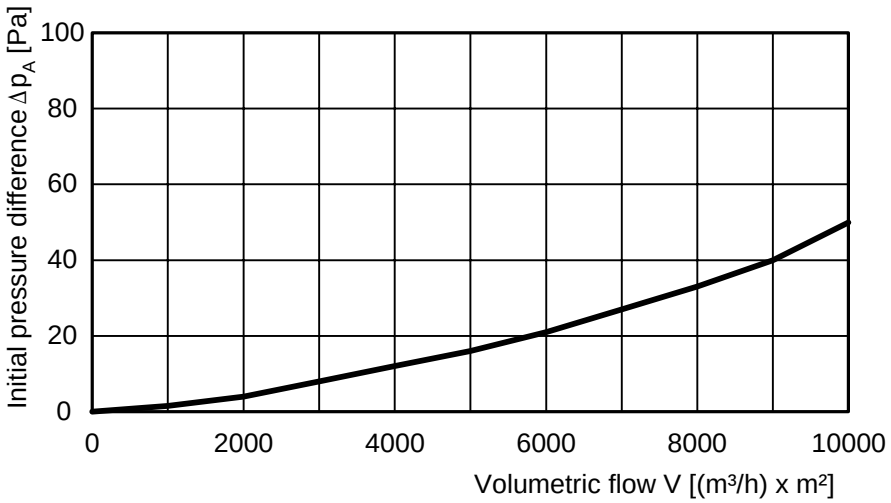

Fig. 5-5 Data sheet of the filter mat

Water cooling

The units with water cooling (MLFB Annex: -1AC0) are suitable for installing in an enclosed cabinet (IP54). The mains filter connection module is identical for water and air cooling. The components not mounted on the heat sink, such as the electronics and the DC link capacitors are cooled by heat transfer at the heat sink fins. To enable this heat transfer to take place, air circulation inside the unit is necessary.

Therefore, when installing the chassis unit in a cabinet, you must make sure that the air being discharged from the fan can flow into the inside of the chassis. The **partitions** to be provided in units with air cooling are a **disturbing factor in this case! They should not be mounted.**

For an application in the types of protection > IP40, a distance of at least 90 mm must be observed between the top of the units and the top of the cabinet.

The units do not require external cooling air.

Additional losses cannot be dissipated!

1-inch internal threads are envisaged for the water connection. The connecting nipples should be made of stainless steel or thick-walled aluminium. Ideally, the connection should have flat seals. If the connecting pieces enclosed with the units are used, these should be sealed with Loctite 542 or with teflon tape.

Cooling water infeed (blue) and return (red) must be connected according to the color scheme! The color markings can be found next to the 1-inch water connection below the heat sink.

Built-in components in the roof section

If components are built into a cabinet roof section (DC bus, DC 24 V supply), these should be placed in the center if possible so that the air leaving the fans can reach the openings in the roof cover unobstructed.

5.2.4 AFE inverter (construction type J)

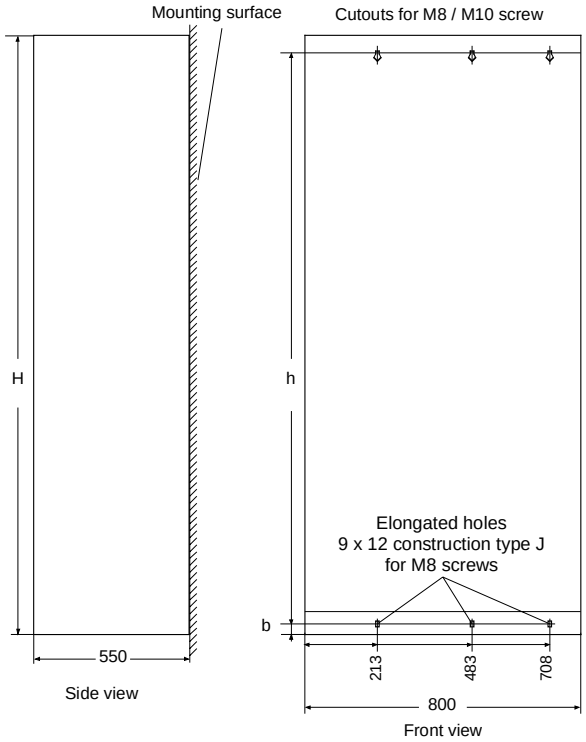

Dimen-sions [mm]	Type J
H	1400
h	1345
b	45

Fig. 5-6 Mounting dimension, construction type J

NOTE

You can find a full set of dimension sheets for AFE inverters of type J in the appendix.

These are identical to the dimension sheets for standard SIMOVERT MASTERDRIVES VC inverters!

Air cooling

Door/roof openings

Explanation of "**arcing short-circuit**":
An underpressure is created in the openings of the cabinet doors due to the flow of air. This is dependent on the volumetric flow and the hydraulic cross-section of the openings.

The flow causes a build-up (over) pressure in the roof or in the top cover.

As a result of the difference in pressure between the overpressure at the top and the underpressure at the bottom of the cabinet, a flow of air is created inside the unit, a so-called arcing short-circuit. This can be stronger or weaker depending on the volumetric flow and the door/roof opening cross-section.

Due to the air flow inside the AFE inverter, preheated air starts to enter the heatsink which causes the equipment to overheat. In addition, a different, more unfavorable operating point is set for the fan.

If the units are operated with an arcing short-circuit, this will result in the failure of the units or in their destruction!

An arcing short-circuit must be prevented by the provision of partitions.

The control cabinets or similar equipment mounted adjacent to the AFE inverter cabinets etc. must also be taken into account.

Fig. 5-8 below shows the required **partitioning**. The partitioning must reach up to the cabinet frame. It must be constructed such that the exit air flow is not pushed into the crossbeams and uprights of the cabinet, but directed around them.

Partitions are necessary with all types of protection higher than IP20.

The required **opening cross-sections** are specified in the table.

The indicated opening cross-section is made up of several holes. In order to keep the pressure loss here to a minimum, the cross-sectional surface has to be **at least 280 mm^2 per hole** (e.g. 7 mm x 40 mm).

The opening and hole cross-sections ensure functioning even with high types of protection.

These are implemented by using wire-lattices (wire fabric DIN 4189-St-vzk-1x0.28) in front of the openings or the filters indicated in the following. If finer filters are used, the filter surface and thus the opening cross-section (upwards) have to be adapted accordingly.

If filters are used, the intervals for their replacement must be observed!

Filters

The following filter mat is approved for use:
FIBROIDELASTOV made by DELBAG-Luftfilter GMBH

Technical filter data in accordance with DIN 24185:

Design		FIBROID ELASTOV 10
Filter class		EU 2
Volumetric flow V	$(m^3/h) \times m^2$	2500 - 10000
Initial pressure difference Δp_A	Pa	9 - 46
End pressure difference Δp_E	Pa	300
Average degree of separation	%	72
Dust storage capability	g/m^2	-
Fire behavior (DIN 53438)		F1/K1
Heat resistance max.	°C	80
Humidity resistance (rel. humidity)	%	100

Dimensions: 1000 x 1500 x 10 mm
Order No.: 16 065 81

Manufacturer:
DELBAG-Luftfilter GMBH
Holzhauser Straße 159
D-13509 Berlin 27
Telephone: (030) 4381-0
Fax: (030) 4381-222

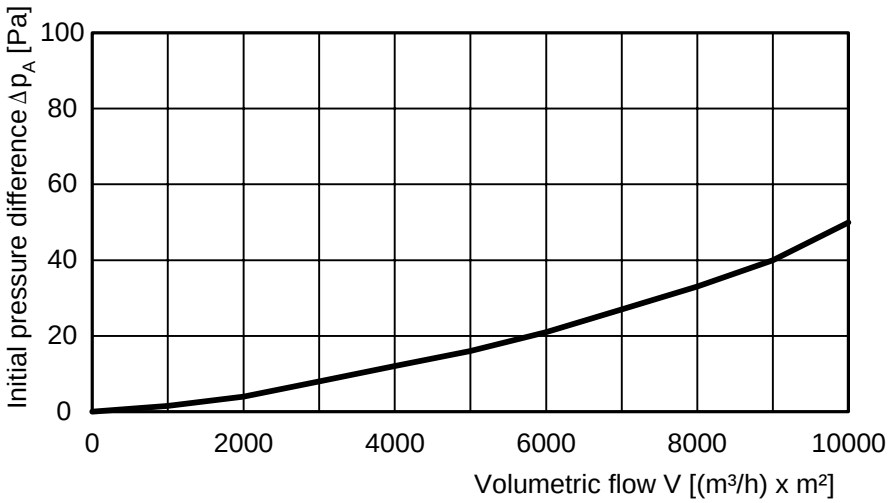

Fig. 5-7 Data sheet of the filter mat

Fan, flow rate, opening cross-sections

MLFB	6SE7035-1TJ80 6SE7036-0TJ80
Fan	2 x RH28M
Minimum flow rate [m3/s]	0.46
Min. opening cross-section in cabinet doors [m2] Degree of protection IP00 to IP42	0.26
Min. opening cross-section in top plate [m2] Degree of protection < IP20	0.26
Min. opening cross-section in top cover [m2] Degree of protection IP22 to IP42	0.26

Table 5-2 Fan, flow rate, opening cross-sections

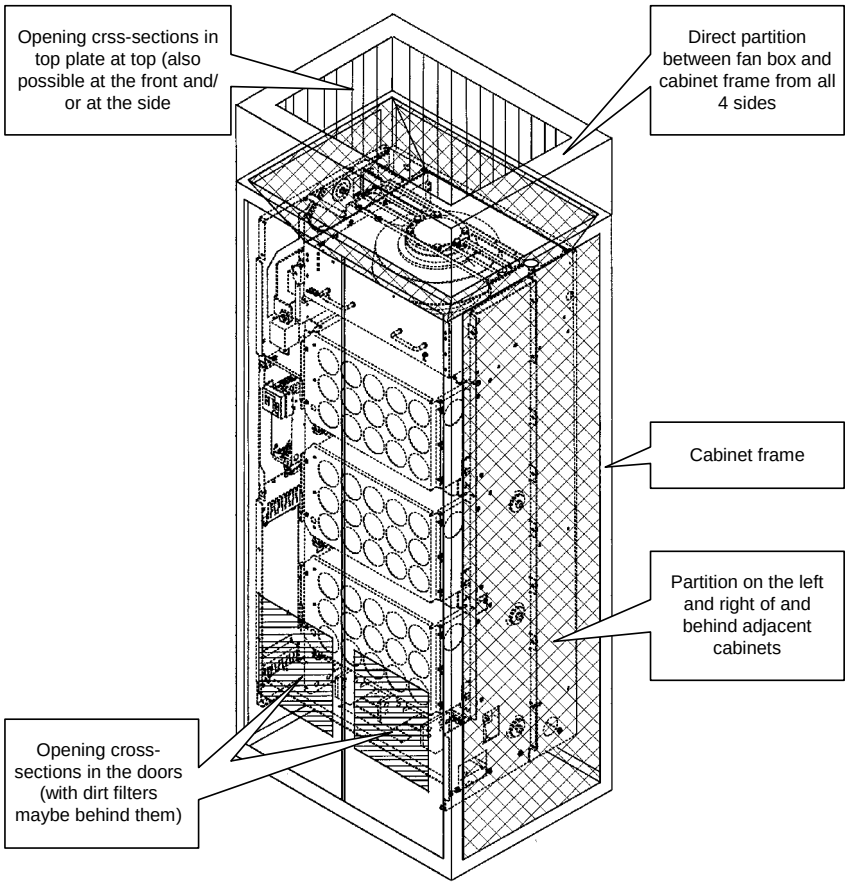

Fig. 5-8 Partitioning

Water cooling

Inverters with water cooling (item number suffix: -1AA0) are suitable for mounting in enclosed cabinets (IP54). The components not mounted on the heat sink, such as the electronics and the DC link capacitors, are cooled by heat transfer at the heat sink fins. To enable this heat transfer to take place, air circulation inside the unit is necessary.

Therefore, when installing the chassis unit in a cabinet, you must make sure that the air being discharged from the fan can flow into the inside of the chassis. The **partitions** to be provided in units with air cooling are a **disturbing factor in this case! They should not be mounted.**

For an application in the types of protection > IP40, a distance of at least 90 mm must be observed between the top of the units and the top of the cabinet.

The units do not require external cooling air.

Additional losses cannot be dissipated!

1-inch internal threads are envisaged for the water connection. The connecting nipples should be made of stainless steel or thick-walled aluminum. Ideally, the connection should have flat seals. If the connecting pieces enclosed with the units are used, these should be sealed with Loctite 542 or with teflon tape.

Cooling water infeed (blue) and return (red) must be connected according to the color scheme! The color markings can be found next to the 1-inch water connection below the heat sink.

Built-in components in the roof section

If components are built into a cabinet roof section (DC bus, DC 24 V supply), these should be placed in the center if possible so that the air leaving the fans can reach the openings in the roof cover unobstructed.

Implementation of 24 V DC auxiliary supply

In order to ensure fault-free operation of the equipment (in terms of electromagnetic compatibility), it is advisable to provide each chassis unit with its own 24 V DC auxiliary supply with isolating transformer.

5.3 Installing the optional boards

WARNING

The boards may only be replaced by qualified personnel.

It is not permitted to withdraw or insert the boards under voltage.

The electronics box of the unit contains up to three slots in which you can insert optional boards.

The LBA (Local Bus Adapter) can hold either the adapter board (ADB) or optional boards.

An ADB (Adapter Board) can accommodate up to two optional boards.

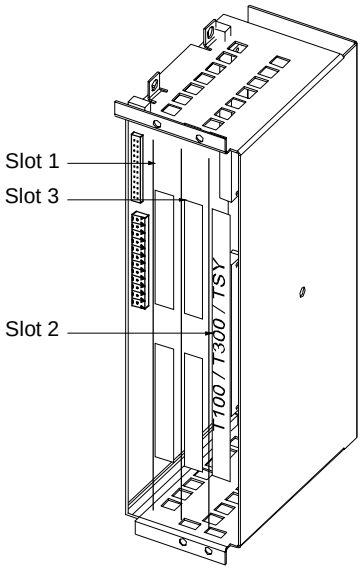

Fig. 5-9 Location of slots for chassis units

NOTE

Slot 2 can be used for technology boards (T100, T300, TSY).

Slots 2 and 3 can also be used for communication boards SCB1 and SCB2.

WARNING

The unit has hazardous voltage levels up to 5 minutes after it has been powered down due to the DC link capacitors. The unit must not be opened until at least after this delay time.

CAUTION

The optional boards contain components which could be damaged by electrostatic discharge. These components can be very easily destroyed if not handled with caution. You must observe the ESD cautionary measures when handling these boards.

Disconnecting the unit from the supply

Disconnect the unit from the incoming power supply. Remove the 24 V voltage supply for the electronics.

Open the front panel.

Preparing installation

Remove the adapter board from the electronics box as follows:

- Undo the two fixing screws on the handles above and below the adapter board.
- Pull the adapter board out of the electronics box using the handles.
- Place the adapter board on a grounded working surface.

Installing the optional board

Insert the optional board from the right onto the 64-pole system connector on the adapter board. The view shows the installed state.

Screw the optional board tight at the fixing points in the front section of the optional board using the two screws attached.

NOTE

The optional board must be pressed tightly onto the plug connector, it is not sufficient to simply tighten the screws!

Re-installing the unit

Re-install the adapter board in the electronics box as follows:

- Insert the adapter board into mounting position 2 or 3.

NOTE

Mounting position 3 cannot be used until at least one adapter board has been installed at mounting position 2. Boards should first be installed in mounting position 2, before mounting position 3 is used.

- Secure the adapter board at the handles with the fixing screws.

Re-connect the previously removed connections.

Check that all the connecting cables and the shield sit properly and are in the correct position.

6 Installation in Conformance with EMC Regulations

The following contains a summary of general information and guidelines which will make it easier for you to comply with EMC and CE regulations.

- Pay attention to a good conductive connection between the housing of the mains connection module and the AFE inverters and the mounting surface. The use of mounting surfaces with good conducting properties (e.g. galvanized steel plate) is recommended. If the mounting surface is insulated (e.g. by paint), use contact washers or serrated washers.
- All of the metal cabinet parts must be connected through the largest possible surface area and must provide good conductivity.
  If necessary, use contact washers or serrated washers.
- Connect the cabinet doors to the cabinet frame using grounding strips which must be kept as short as possible.
- All signal cables must be shielded. Separate the signal cables according to signal groups.
  Do not route cables with digital signals unshielded next to cables with analog signals. If you use a common signal cable for both, the individual signals must be shielded from each other.
- Power cables must be routed separately away from signal cables (at least 20 cm apart). Provide partitions between signal cables and power cables. The partitions must be grounded.
- Connect the reserve cables/conductors to ground at both ends to achieve an additional shielding effect.
- Lay the cables close to grounded plates as this will reduce the injection of undesired signals.
- Use cables with braided shields. Cables with foil shields have a shielding effect which is worse by a factor of five.
- Contactor operating coils that are connected to the same supply network as the inverter or that are located in close proximity of the inverter must be connected to overvoltage limiters (e.g. RC circuits, varistors).

You will find further information in the brochure "Installation Instructions for EMC-correct Installation of Drives"
(Order No.: 6SE7087-6CX87-8CE0).

7 Connecting-Up and Wiring

WARNING

SIMOVERT MASTERDRIVES converters are operated at high voltages.
The equipment must always be disconnected from the supply before any work is carried out!
Only qualified personnel should be allowed to work on this equipment!
Non-observance of the safety instructions can result in death, severe personal injury or substantial property damage.

Owing to the DC link capacitors, the equipment may remain at a hazardous voltage for up to 5 minutes after disconnection of the power supply. For this reason, wait for at least 5 minutes before commencing work on the converter or DC link terminals.

Voltage may be present at the power and control terminals even when the motor is stopped.

When working on the open converter, remember that live parts are exposed.

The user is responsible for ensuring that all equipment is installed and connected up in accordance with the approved codes of practice of the country concerned and any other regional or local codes that may apply. Special attention must be paid to proper conductor sizing, fusing, grounding, isolation and disconnection measures and to overcurrent protection.

7.1 Connection overviews

7.1.1 AFE basic mains module and CleanPower filter

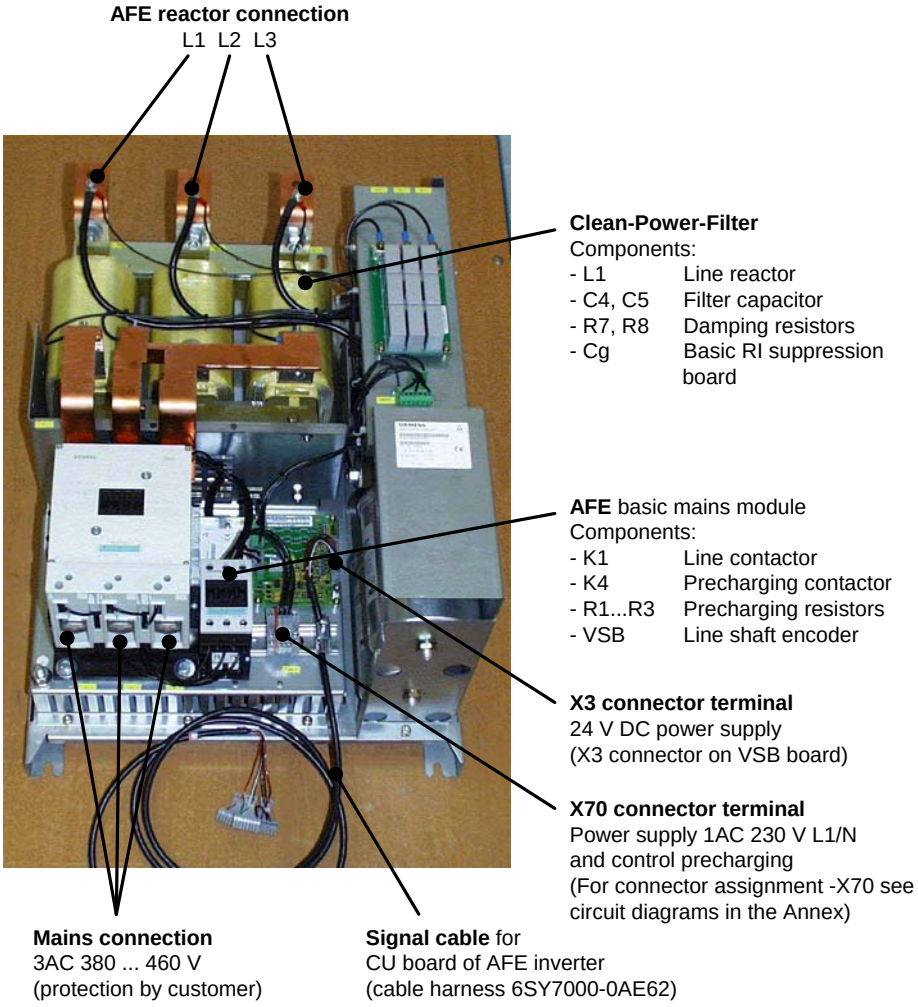

Fig. 7-1 Connection overview of AFE basic mains module with CleanPower filter

7.1.2 AFE Inverter construction types E to G

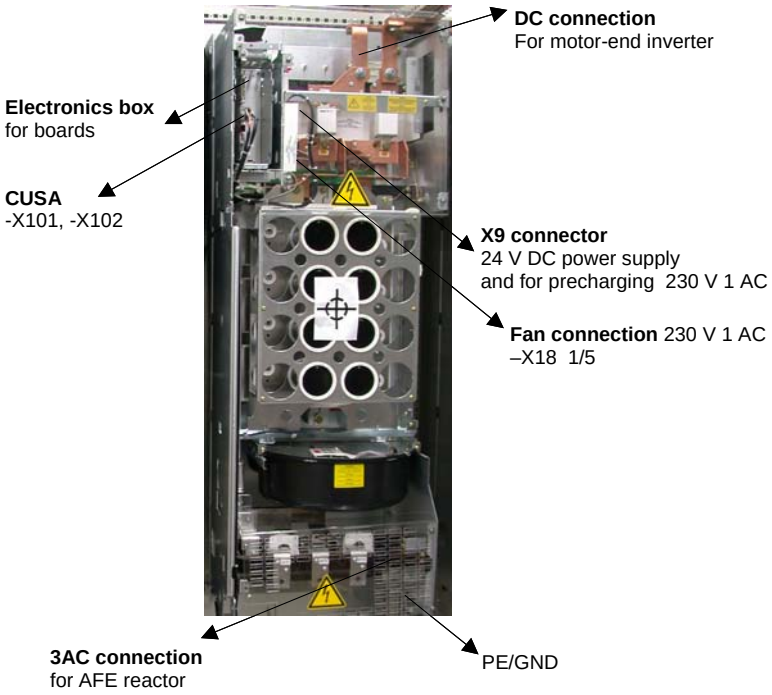

Fig. 7-2 Overview of connections on AFE inverter, construction types E to G

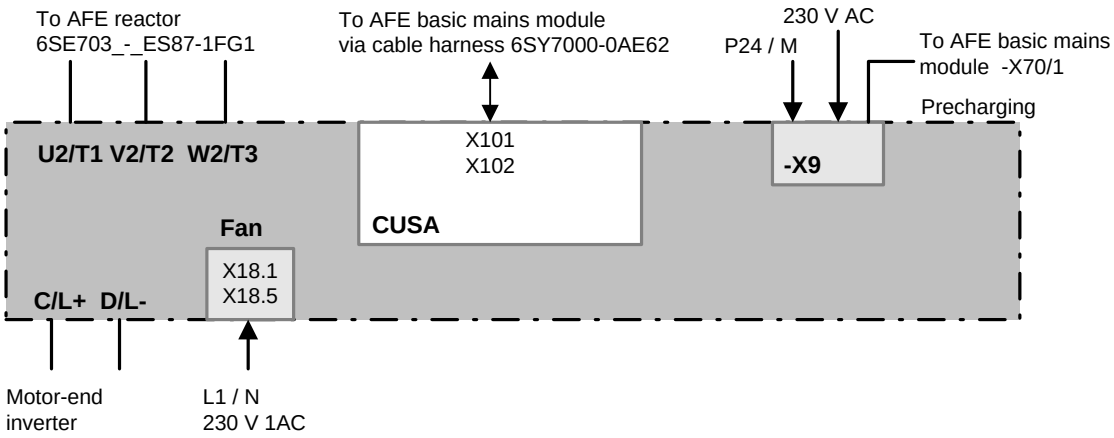

Fig. 7-3 Connection overview of AFE inverter (schematic)

7.1.3 AFE Inverter construction type J

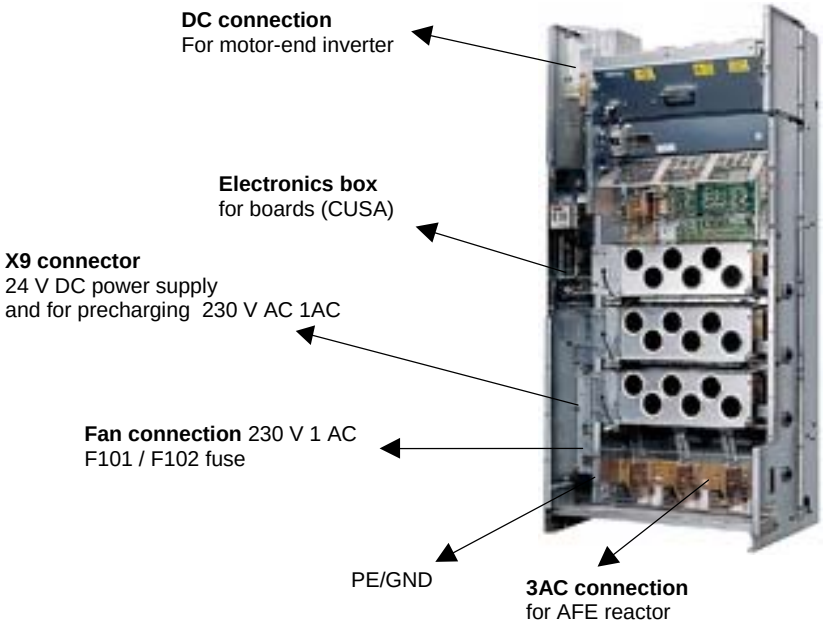

Fig. 7-4 Connection overview of AFE inverter, construction type J

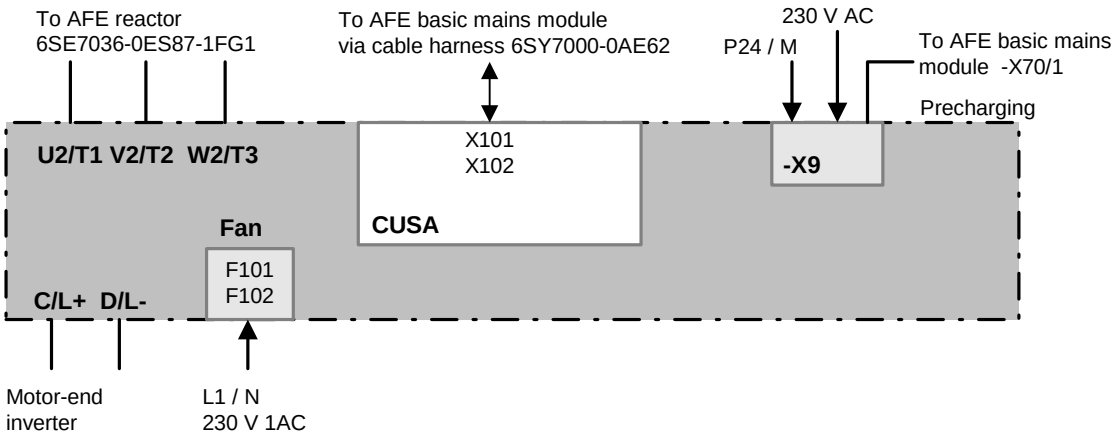

Fig. 7-5 Connection overview of AFE inverter (schematic)

7.1.4 Overview of core and system components for AFE functionality with example configuration

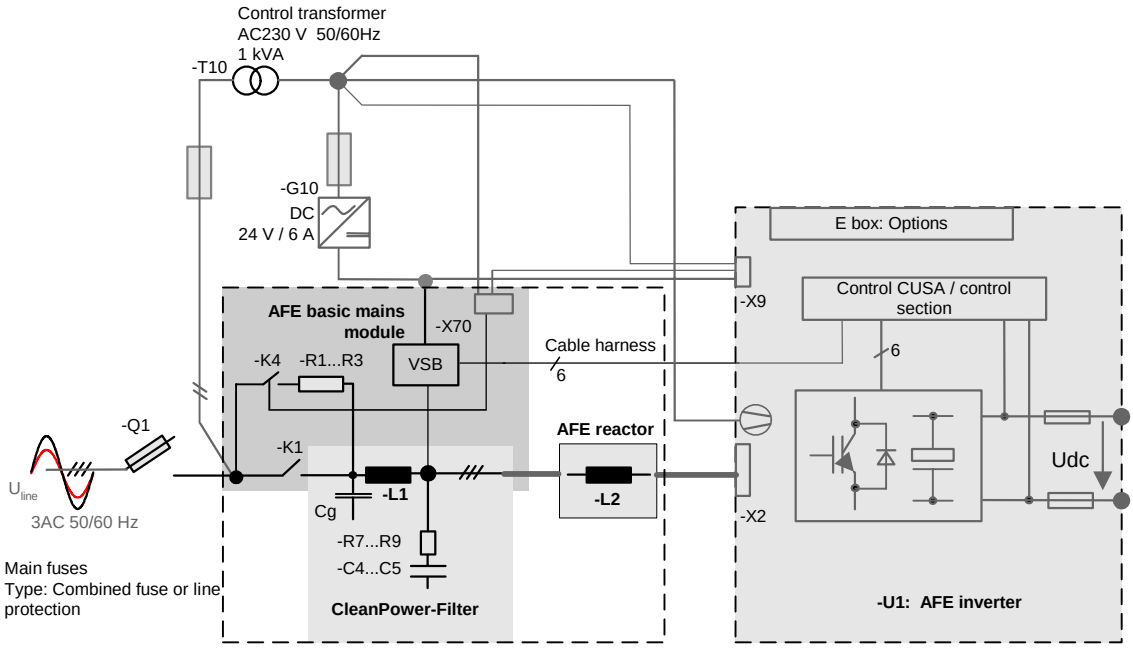

Fig. 7-6 Connection overview of complete AFE function (core and system components)

If you wish to achieve full AFE functionality, you must add the system components to the complement of core components. Table 7-1 and Table 7-2 lists the key system components as recommended by Siemens.

AFE inverter order number / rating	Input current	Mains fuse 3AC Utilization category gR *or*	Mains fuse 3AC Utilization category gL
6SE7033-7EG80 / 250 kW 400 V	370 A	3NE1 332-0 400 A	3NA3 260 400 A
6SE7033-2EG80 / 214 kW 400 V	315 A	3NE1 331-0 350 A	3NA3 252 315 A
6SE7032-6EG80 / 177 kW 400 V	260 A	3NE1 230-0 310 A	3NA3 252 315 A
6SE7032-1EG80 / 143 kW 400 V	210 A	3NE1 227-0 250 A	3NA3 144 250 A
6SE7031-8EF80 / 125 kW 400 V	186 A	3NE1 227-0 250 A	3NA3 144 250 A
6SE7031-5EF80 / 100 kW 400 V	146 A	3NE1 225-0 200 A	3NA3 140 200 A
6SE7031-2EF80 / 85 kW 400 V	124 A	3NE1 224-0 160 A	3NA3 036 160 A
6SE7031-0EE80 / 63 kW 400 V	92 A	3NE1 021-0 100 A	3NA3 032 125 A
	for 370…260 A 210…124 A 92 A	Mains switch *or*	No-load fuse-disconnector
		3KL57 30-1AB00 400 A 3KL55 30-1AB00 250 A 3KL52 30-1AB00 125 A	3NP43 70 - 0CA01 400 A 3NP42 70 - 0CA01 250 A 3NP40 70 - 0CA01 160 A
		24 V power supply 6 A Unregulated *or*	24 V power supply 10 A Regulated (SITOP)
		6SY7000-0AC66	6EP1-334-2AA00
	for 370…124 A 92 A	230 V control transf .1 kVA 230 V control transf . 0.63 kVA	
		6SY7000-0AC68 6SY7000-0AC67	

Table 7-1 Recommended system components construction types E to G

AFE inverter order number / rating	Input current	Mains fuse 3AC Utilization category gR *or*	Mains fuse 3AC Utilization category gL
6SE7035-1EJ80 / 340 kW 400 V 6SE7036-0EJ80 / 380 kW 400 V	510 A 560 A	3NE1435-0 560 A 3NE1436-0 630 A	3NA3372 630 A 3NA3372 630 A
		Mains switch *or*	No-load fuse-disconnector
		3KL61 30-1AB00 630 A	3NP54 60 - 0CA00 630 A
		24 V power supply 6 A Unregulated *or*	24 V power supply 10 A Regulated (SITOP)
		6SY7000-0AC66	6EP1-334-2AA00
		230 V control transf. 1 kVA	
		6SY7000-0AC68	

Table 7-2 Recommended system components construction type J

NOTE

Owing to the effects of electromagnetic interference, the use of a control transformer to generate the 230 V supply is generally recommended; the fans for AFE inverters can be supplied directly. The control transformer must be protected by a 6 A fuse.

The 24 V power supply can be either regulated or unregulated. This power supply must be protected by a 4 A fuse. It can also be fed in directly from the plant.

It is best to use combination fuses (type 3NE1....) for the line-side mains fuses, although miniature circuit-breakers are also allowed.

The example configuration (Fig. 7-7) for construction type J shows a switch-disconnector and an EMC filter as a typical configuration for AFE functionality. In this case, the 230 V supply is taken directly from the mains.
The same example can also be applied to construction types E to G. Only difference: The fan connection goes directly to terminals X18.1 and X18.5 on the inverter.

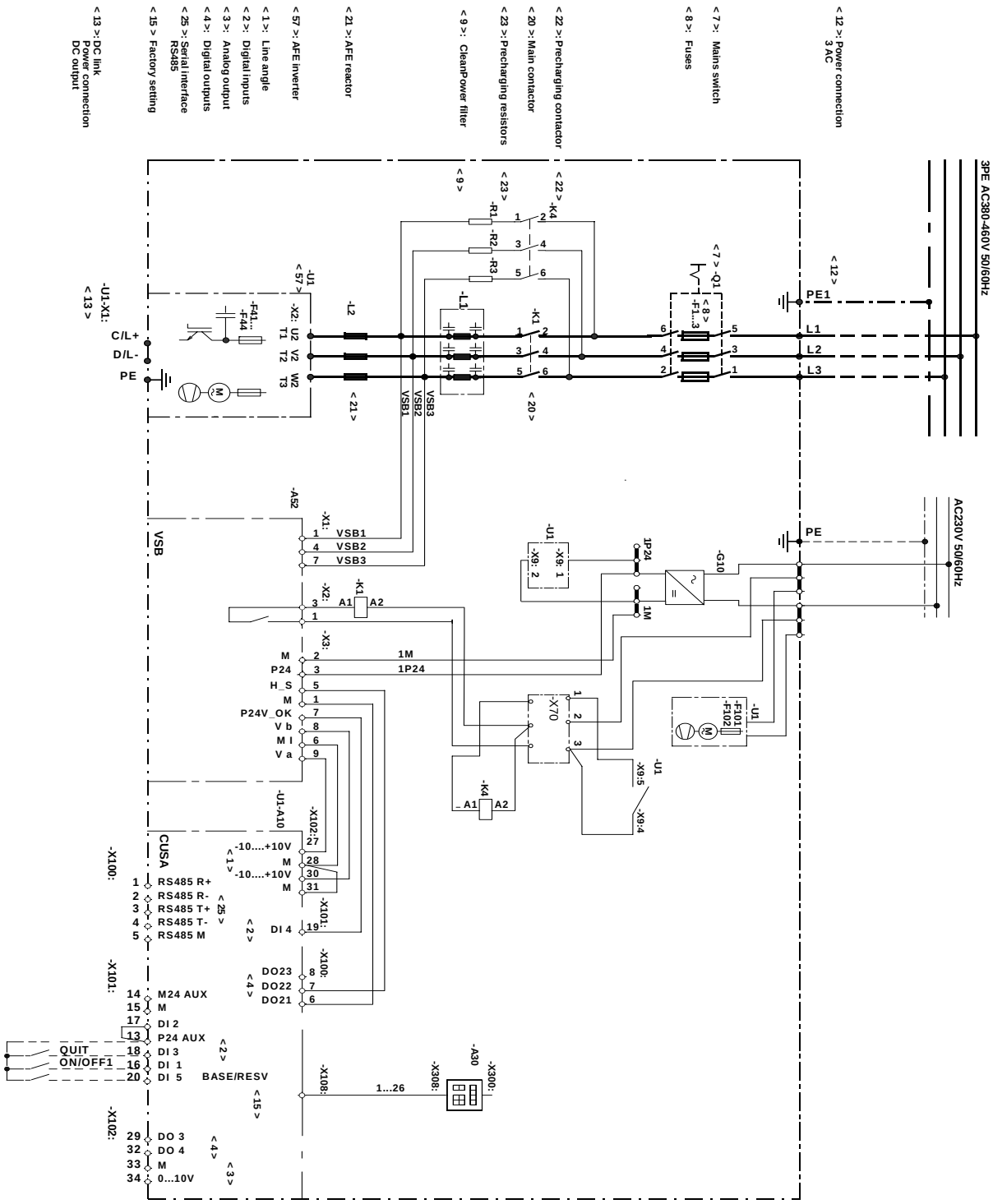

Fig. 7-7 Typical circuit for AFE chassis unit, construction type J

7.2 Power connections

NOTE

The connection cross-sections are determined for copper cables at 40 °C (104 °F) ambient temperature (according to DIN VDE 0298 Part 4 / 02.88 Group 5).

7.2.1 AFE inverter and AFE reactor

The supply terminals are marked as follows:

Motor-end inverter:	C/L+	D/L-	
AFE reactor connection:	U2/T1	V2/T2	W2/T3
PE conductor connection:	PE1	PE2	

Mains voltage 380 V to 460 V								
Order numbers		**Rated output**	**Rated input current**	**Reactor connection to AFE inverter -X2**		**Output end DC**		
						DC link connection		
AFE reactor	**AFE-Inverter**		**3 ph. AC mains end**	**Cross section**		**Rated output current**	**Cross section**	
Position 1	**Position 2**			**VDE**	**Max.**		**VDE**	**Max.**
6SE70...	**6SE70...**		**[A]**	**[mm²]**		**[A]**	**[mm²]**	
36-0ES87-1FG1	**35-1**EJ80	340 kW / 400 V	510	2x185	2x300	570	2X185	4x300
36-0ES87-1FG1	**36-0**EJ80	380 kW / 400 V	560	2x240	4x300	630	2x240	4x300
33-7ES87-1FG1	**33-7**EJ80	250 kW / 400 V	370	2x120	2x150	425	2x120	2x150
33-2ES87-1FG1	**33-2**EJ80	214 kW / 400 V	315	2x95	2x150	360	2x120	2x150
32-6ES87-1FG1	**32-6**EJ80	177 kW / 400 V	260	2x70	2x150	300	2x95	2x150
32-1ES87-1FG1	**32-1**EJ80	143 kW / 400 V	210	2x50	2x150	240	2x70	2x150
32-1ES87-1FG1	**31-8**EF80	125 kW / 400 V	186	2x50	2x70	215	2x70	2x70
31-5ES87-1FG1	**31-5**EF80	100 kW / 400 V	146	1x70	2x70	165	2x50	2x70
31-2ES87-1FG1	**31-2**EF80	85 kW / 400 V	124	1x50	2x70	140	1x70	2x70
31-0ES87-1FG1	**31-0**EE80	63 kW / 400 V	92	1x35	2x70	105	1x50	2x70

Table 7-3 Conductor cross-sections AFE inverter, construction types E to J

NOTE

The mechanical construction must provide the earth connection for the AFE reactor (baseplate connection). The terminal links must be protected against accidental contact.

7.2.2 Auxiliary power supply, precharging

X9 - external DC 24 V supply, precharging contactor control

The 5-pole terminal strip is used for connecting up a 24 V voltage supply and for connecting a precharging contactor.

The connections for the contactor control are floating.

The position of the terminal strip can be seen from the connection overviews.

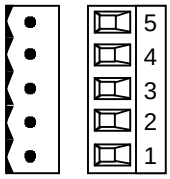

Terminal	Designation	Meaning	Range
5	Precharge contr.	Precharging contactor control	AC 230 V
4	Precharge contr.	Precharging contactor control	1 kVA
3	n.c.	Not connected	
2	0 V	Reference potential	0 V
1	+24 V (in)	24 V voltage supply	DC24 V ≤ 3.5 A

Connectable cross-section: 2.5 mm^2 (AWG 12)

Table 7-4 Connection of external DC 24 V aux. voltage supply and precharging contactor control

Fan supply

AFE inverters of construction type J (compare above) require a supply cable cross-section of 2.5 mm^2 (AWG 12). Connection to F101 and F102 (fan fuses).

7.2.3 Protective conductor connection

For AFE basic mains module, directly via the mounting surface and via PE screw.

For AFE inverter via PE1 and PE2 and contact via the mounting surface.

NOTE

It is important to ensure that the basic mains module and the AFE inverter are earthed at the same potential, use equipotential bonding if necessary.

7.3 Control terminals

7.3.1 Standard connections of the AFE inverter

The basic version of the converter features the following control terminals on the CUSA board:

- Control terminal strips X100, X101 and X102 on CUSA electronics board
- Connection for OP1S operator control panel
- One serial interface (USS bus, RS485)
- Serial interfaces RS485 and RS232 (SCom1) on PMU X300

CAUTION

The CUSA board contains components which can be destroyed by electrostatic discharge. These components can be very easily destroyed if not handled with caution.
See also ESD precautions outlined in Section "Definitions and warnings".

Connectors for control terminal strip

The connectors for the control terminal strip are included in the scope of supply and ready connected to the cable harness of the AFE basic mains module (cf. Fig. 7-1).

Cables with cross-sections from 0.14 mm^2 to 1.5 mm^2 (AWG: 26 to 16), or 1 mm^2 (AWG: 18) can be connected using stranded wire with lugs to the connectors (recommended: 0.5 mm^2 (AWG: 20)). The connectors can be identified by the pin numbers (Table 7-5), connector positions on the board are shown in Fig. 7-8.

Two screen clamps and four cable ties are required from the loose components supplied to connect the control cables.

Connector X9 is needed to control the pre-charging operation and to connect an external power supply (see Fig. 7-8).

Connector		Label								
X100	eight-pin, coded	1	2	3	CU	6	7	8		
X101	eight-pin, coded	13	14	15	CU	18	19	20		
X102	ten-pin	25	26	27	28	CU	31	32	33	34

Table 7-5

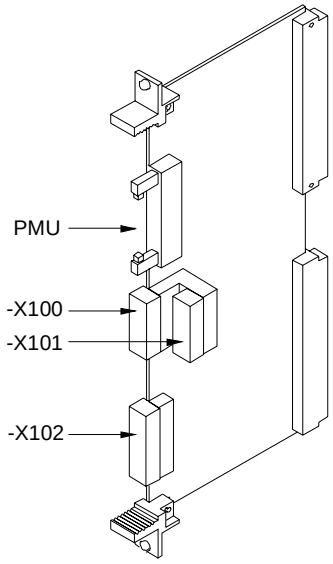

Fig. 7-8 View of CUSA

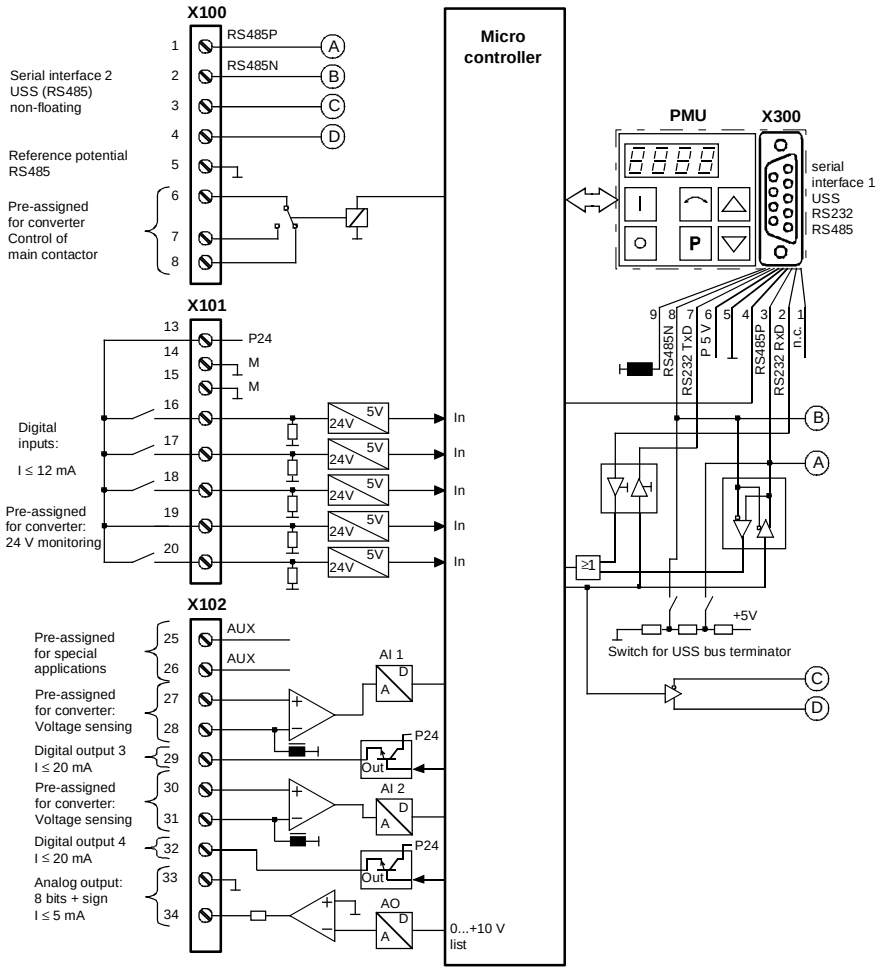

Fig. 7-9 View of standard terminals

7.4 Connecting up control cables

NOTE

Generally, control lines that are connected to the AFE inverter must be shielded to achieve maximum possible interference immunity. The shield must be grounded at both ends.

To avoid noise coupling, control wires which are directly connected to the chassis should be separated from power wiring by a minimum distance of 20 cm.

Control and power cables must cross each other at an angle of 90°.

7.5 Terminal assignments

X100 control terminal strip

The terminals on the control terminal strip are as follows:

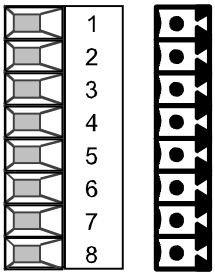

Terminal	Name	Function
1		Transmit and receive line -RS485, differential input / output, positive (RS485/T+)
2		Transmit and receive line -RS485, differential input / output, negative (RS485/T-)
3		Transmit output RS485 Standard, differential output, positive (RS485T+)
4		Transmit output RS485 Standard, differential output, negative (RS485T-)
5 *)	M RS485	Reference potential RS485
6		**Digital output 2, must be connected to VSB**
7		**Digital output 2, must be connected to VSB**
8 **)		Digital output 2, (changeover) NC contact

Possible cross-section: 1.5 mm^2 (AWG 16)

In the assembled state, terminal 1 is at the top.

*) An identical interface to the type on connector -X100 is available on connector -X300 on the parameterizing unit. Only one of these two interfaces may be used, see Section "Interfaces".

Digital output 1 is available on -X9:4,5 (must be connected to precharging circuit / VSB)

**) Load capability of digital outputs:
AC 60 V, 60 VA, cos φ = 1
AC 60 V, 16 VA, cos φ = 0.4
DC 60 V, 24 W

Table 7-6 Control terminal strip X100

X101 control terminal strip

The terminals on the control terminal strip are as follows:

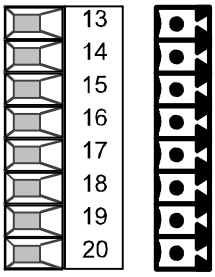

Terminal	Name	Function	Range
13	P24 AUX	Aux. voltage supply	DC 24 V / 150 mA
14	M24 AUX	Reference potential	0 V
15		Reference potential for digital inputs 1 to 5 with ext. signal voltage	
16		Digital input 1	Signal sensitivity of digital inputs: • H = 24 V (13 V to 33 V) • I_{max} = 15.7 mA • L = 0 V (– 0.6 V to 3 V)
17		Digital input 2	
18		Digital input 3	
19 *)		Digital input 4	
20		Digital input 5	

Possible cross-section: 1.5 mm^2 (AWG 16)

In the assembled state, terminal 1 is at the top.

*) Must be used to monitor the ext. 24 V supply P576.1 = 1004; P576.2 = 1004).

Table 7-7 Control terminal strip X101

X102 control terminal strip

The terminals on the control terminal strip are as follows:

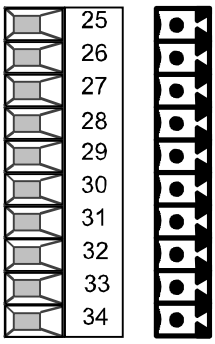

Terminal	Name	Function	Range
25	Cannot be used	Analog input 3	0 V to 5 V
26	Cannot be used	Analog input 4	0 V to 5 V
27	Assigned	Analog input 1	0 V to ± 10 V
28	Assigned	Reference potential for analog inputs 1, 3	
29		Digital output 3	I_{max} = 20 mA
30	Assigned	Analog input 2	0 V to ± 10 V
31	Assigned	Reference potential for analog inputs 2, 4	
32		Digital output 4	I_{max} = 20 mA
33 *)		Reference potential for analog output 1, digital output 3, digital output 4	
34 *)		Analog output 1	0 V to 10 V Rating ≤ 5 mA equals > 2 kΩ

Possible cross-section: 1.5 mm^2 (AWG 16)

*) NOTE:
To increase the noise immunity of the signals, an isolating amplifier should be connected between the analog output and measuring unit for cables > 4 m.

Table 7-8 Control terminal strip X102

X300 serial interface

A serial connection to an automation unit or PC can be made via connector X300 on the PMU. The unit can therefore be controlled and operated from the central control station or control room.

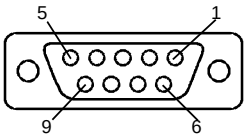

Pin	Name	Function	Range
1	n.c.	Not assigned	
2	RS232 RxD	Receive data via RS232	RS232
3	RS485 P	Data via RS485	RS485
4	RTS	Request to send, for direction reversal with interface converters	
5	M5V	Reference potential for P5V	0 V
6	P5V	5 V aux. voltage supply	+5 V, Imax = 200 mA
7	RS232 TxD	Transmit data via RS232	RS232
8	RS485 N	Data via RS485	RS485
9		Reference potential for RS232 or RS485 interface (with RF suppression for EMC)	

Table 7-9 Serial interface X300

7.6 Digital inputs/outputs

Digital inputs

Four parameterizable digital inputs (24 V) are available on the control terminal strip (-X101) of the CUSA board. These inputs can be used to input commands, external faults/alarms and for returning status data to the AFE inverter's control word.

Connection: See Section "Connecting up control cables".

Parameterization: See Section "Control and status words".

Factory setting (valid for standby operation)**:**

Digital input	Command HIGH	Command LOW	Control word bit	Parameter
1	ON	OFF1	0	P554.2 = 1001 (standby)
2	ON	OFF2 (electrical)	1	P555.2 = 1002 (standby)
3	Acknowledge ↑		7	P565.2 = 1003 (standby)
5	Standby setting	Basic setting	30	P590 = 1005

Table 7-10 Digital inputs

Digital outputs

Digital outputs 1 and 2 on the AFE inverter are pre-wired for the precharging and main contactors. For safety reasons, they cannot be wired up for other purposes.

Two further digital outputs are available for optional functions.

Factory setting:

Digital output	Connector	Pin	Signal HIGH	Signal LOW	Status word bit	Para-meter
3	-X102	29		Fault	3	603.1 = 1003
4	-X102	32		Operation	2	602.1 = 1004

Table 7-11 Digital outputs

NOTE

Faults, alarms and starting lockout (HIGH active) are displayed as **LOW active** via the terminal strip (digital outputs). See Section "Status word".

Basic converter interface SCom1

The USS protocol (universal serial interface) is implemented on the basic converter interface SCom1.

The following documentation is available depending on the particular application of the SCom1 basic converter interface:

- Connection of a PC / PG with DriveMonitor software for start-up/servicing/operation:
  The documentation is provided on DriveMonitor CD in files BEDANLTG.TXT (ASCII format) and BEDANLTG.WRI (WRITE format).
- Connection of higher-level PLCs with USS protocol:
  SIMOVERT MASTERDRIVES
  Application of serial interfaces with USS protocol
  Order No.: 6SE7087-6CX87-4KB0

Additional general comments regarding connection and parameterization:

Connection: See Section "Control terminals"

NOTE

A communication link can be made either via the terminal strip on the CU -X100 (RS485 Standard) **or** the interface connection on the PMU -X300 (9-pin SUB D connector / RS232 or RS485 (V24)).

Only one of the above possible connections may be used!

A four-wire connection can be implemented when the SCom2 is connected via the terminal strip (-X100) on the CUSA board. Switchover between two-wire and four-wire connection is automatic.

NOTE

The bus terminations (150 Ω in total) must be set for the last bus station (slave). For positioning of jumpers on S1, see Fig. 7-9.

SCom1: Close jumpers S1.1 and S1.2 of DIP-FIX S1 on the CUSA.

Dual-port Ram (DPR for SCB, TSY, CB, TB)

The dual-port RAM is the internal interface on the CUSA (-X107) for connection of option boards via the LBA (Local Bus Adapter, option) of the electronics box.

Available option boards:

- TSY (Tachometer and Synchronization Board)
- TB (Technology Board)
- SCB (Serial Communication Board)
- CB (Communication Board)

For further information about connecting option boards and parameterizing the interface, see also the operating instructions for the relevant boards.

For additional information, see Section "Control and status words".

7.7 Voltage Sensing Board (VSB)

Line voltage sensing

The supply voltage is sensed using the analog board VSB (Voltage Sensing Board) via the two analog inputs on control board CUSA. Furthermore, the 24 V power supply is monitored on this board and a relay provided to control the main contactor.
The VSB is an integral component of the AFE basic mains module.

NOTE

Connect the 24 V power supply to -X3 terminals 2 and 3.

The remaining signals are carried via the supplied cable harness.

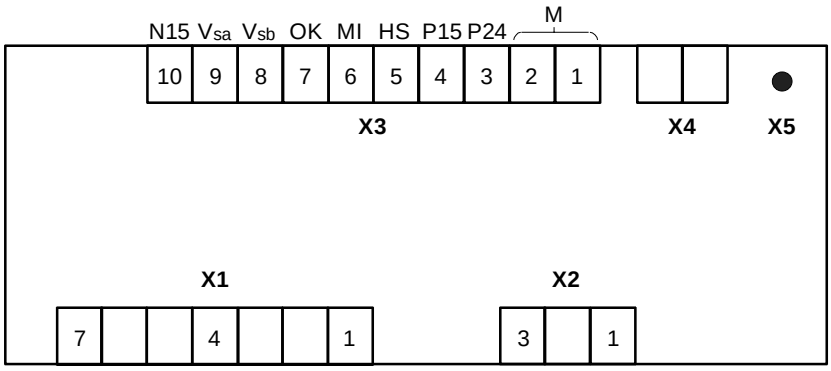

Fig. 7-10 View of option board VSB

Connector assignments

VSB	X3			
-15-V output	10		CUSA	Do not connect
Line voltage component V_{sa}	9	→	X102:27	Analog input 1
Line voltage component V_{sb}	8	→	X102:30	Analog input 2
Ext. 24 V monitor (OK)	7	→	X101:19	Digital input 4
Ref. ground for V_{sa}, V_{sb}	6	→	X102:28/31	Ref. AI 1 and 2
Main contactor control	5	←	X100:7	NO contact BO2
+15 V output	4		CUSA	Do not connect
Input for 24 V ext.	3	←	External 24 V power supply	
24 V ground	2		External M24 power supply	
24 V ground	1	→	X100:6	Reference BO2

		X2	
Main contactor	Line →	1	AC 230 V
Not assigned		2	
Main contactor	Coil ←	3	1 kVA

	X1	
Line voltage	1	Phase L1
Not assigned	2	
Not assigned	3	
Line voltage	4	Phase L2
Not assigned	5	
Not assigned	6	
Line voltage	7	Phase L3

	X4
Disabled for AFE	1
Disabled for AFE	2

Earthing point / screen earth	**X5**

8 Basic Function Check

WARNING

It imperative to observe the procedure described here for initial commissioning of the equipment.

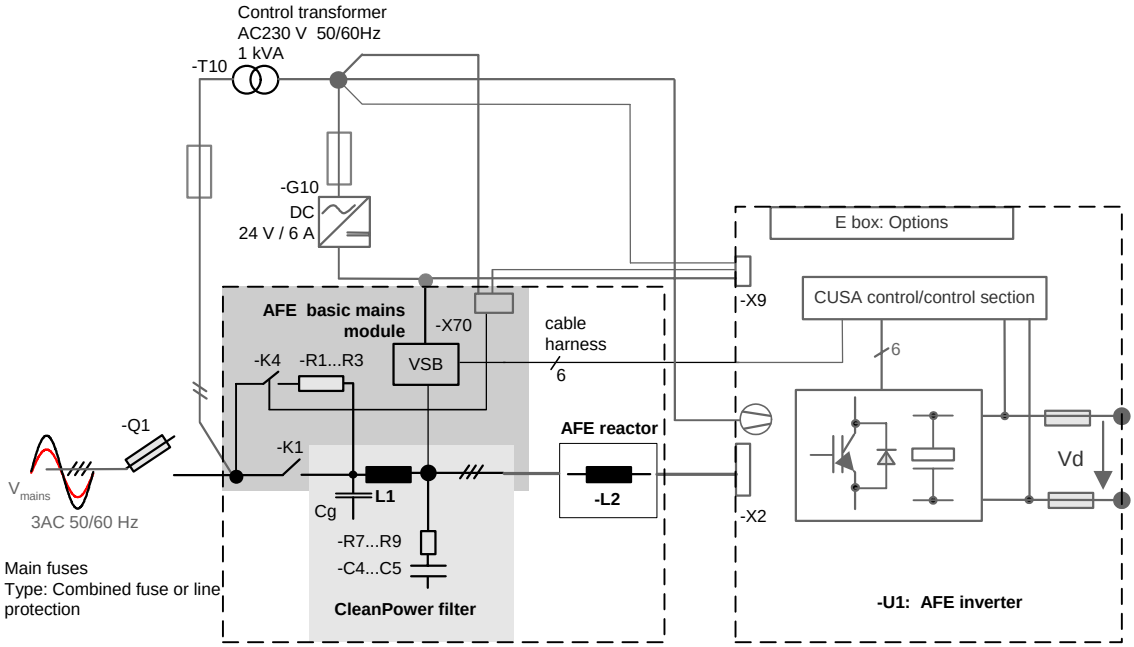

Please check:

Starting state:

1. Main switch (or no-load fuse-disconnector) -Q1 is open
2. Mains is connected to the main switch-Q1 in clockwise phase sequence (L1, L2, L3)
3. Control cabling (cable harness, precharging, power supply, fan supply) is complete;
   Cable harness securely attached (cf. Chapter 7 "Typical circuit")
4. Power cabling
   AFE reactor, phase assignment check
   Connection to AFE inverter and CleanPower filter
   (cf. Chapter 7 "Typical circuit")
5. DC link connection not yet connected to motor inverter
6. No further control cables are connected, no communication

Preliminary check

- Main contactor -K1 and precharging contactor -K4 must be open
- Main switch must be open
- Mains voltage must be applied to the main switch
- Ensure clockwise rotating field
- Control panel (PMU) must still be dark
- Control transformer -T10 must be wired
- Fuses must be connected

Activating main switch -Q1

- Control transformer -T10 supplies 230 V AC
  - to the fan of the AFE inverter
  - to the DC power supply -G10
  - to the switching contact for the precharging contactor
    X9: 4: 230 V,
    X9: 5 to the -X70.1 of the CleanPower filter
- 24 V power supply -G10 to the AFE inverter
  -X9: 1 (P24) 2:(M24) and to VSB -X3: pins 3 and 2 (ground)
- On the AFE inverter, the control panel (PMU) lights up, initialization has been completed after several seconds and the status message: **0009 = READY FOR ON** appears on the PMU.

If the READY FOR ON message does not appear, check all contacts, fuses and voltages once again and replace CUSA if necessary.

Parameter reset

P052 = 1
Reset is run
P052 automatically returns to 0.

Disabling control of the AFE inverter

P561 = 0

CAUTION

If this is not observed, the fuse may blow or the Clean Power filter may be subjected to increased stress!

Checking actual value acquisition and precharging

Issue the ON command via PMU (by default, ON command P554 already set on PMU)

- Reaction: Precharging begins with picking up of the contactor -K4, and the DC link voltage (see display parameter r006) rises within approximately 1 second to the final value, approximately 1.35 times the mains voltage. The main contactor -K1 is connected once the final value has been reached.
- Contacts: cf. section entitled "Control connections"
  Main contactor ON command from CUSA X100 terminal 6 (M24)-7 signal from normally-open CUSA binary output 2
  This command is forwarded to the mains angle acquisition circuit
  VSB: connector X3: terminal 5 signal
  X3: terminal 1 M24

  Output to potential-free contact VSB:
  X2 terminal 1: 230 V AC
  X2 terminal 3: to coil of main contactor -K1
- Reaction: Once the main contactor -K1 has picked up, the precharging contactor -K4 opens after approx. 500 ms.
- Status: 0011 "Ready to Run"
  The AFE inverter is now in the "Ready to Run " state and the following actual values must be correctly displayed:
  r032: Mains frequency tolerance ± 2 %
  r030: Mains voltage, currently applied
  RMS value tolerance ± 2 %

If the **fault F004** occurs, check the mains direction of rotation, check the main contactor's contacts and check the mains voltage.

If alarm A039 or F007 occurs, please check the 24 V power supply of the VSB board (connector -X3 pin 2 and 3).

Enabling control

→ After successful precharging and actual value check

P561 = 1

- Reaction: The AFE inverter pulse is audibly and evenly

  The DC link voltage (r006) goes to the value P071 x P125, and is stable with slight fluctuations ± approx. 1 %.

  The current consumption of the AFE inverter (r004) should be no greater than 20% of the rated current of the unit (cf. P072).
- Fault: Replace CUSA or VSB in the event of clear deviations in the current consumption.

The basic function check of the AFE rectifier/regenerative feedback unit has been completed and the unit is operable.

Commissioning can now take place depending on project planning.

9 Explanation of Terminology and Functionality of the AFE

Operating modes of the AFE rectifier/regenerative feedback unit

- Operating modes are set via P164 "Operating mode"
- See Section "Function diagrams"
- Applications:
  - Supplying the voltage-source DC link of SIMOVERT MASTERDRIVES series 6SE70 converters.
  - Reactive power compensation
  - Regenerative feedback from a DC voltage source to the supply system
- Operating modes:
  - Operating mode "cos(phi) control " (P164 = 1, factory setting):

    The sinusoidal line current is controlled with an adjustable cos(phi) (P120). For a cos(phi) of 1, only active power is taken from or regenerated to the line. A cos(phi) of + 0.8 results in a distribution of the line current into 80 % active current and 60 % reactive current (inductive, as cos(phi) is positive). The sign serves only to distinguish between inductive and capacitive reactive power. In this mode, therefore, a change in the active power automatically changes the reactive power. A higher-level closed-loop DC link voltage controller controls the DC link voltage to the setpoint (r447). The output of this closed-loop DC link voltage controller is the setpoint for the active current.
  - Operating mode "Reactive power compensation" (P164 = 0):

    The reactive power can be input as either capacitive or inductive (P122) (± 140 % of AFE rated apparent power) and is independent of the active power. A higher-level DC link voltage controller controls the DC link voltage to the setpoint (r447). The output of this DC link voltage controller is the setpoint for the active current. If the "sum“ (square-root of the sum of the squares of the absolute values) of the active and reactive power is greater than the maximum apparent power of the AFE, the reactive power is limited (= Line current management).
  - Operating mode "Current control" (P164 = 2):

    The active line current can be externally specified via a setpoint node (P486). The DC link voltage is not controlled and is given by an external voltage source (e.g. master Master AFE).
- Operating mode: "regenerative partial load" (P164 = 3):

In this operating mode, active power is fed back into the mains as from $U_d > U_{dset}$.

Indexed parameters

These parameters are divided into various "indices" (i001, i002, etc.). A separate parameter value can be assigned to each index.

The meaning of the "indices" of the relevant parameter (parameter number) can be found in Section "Parameter List".

Example:

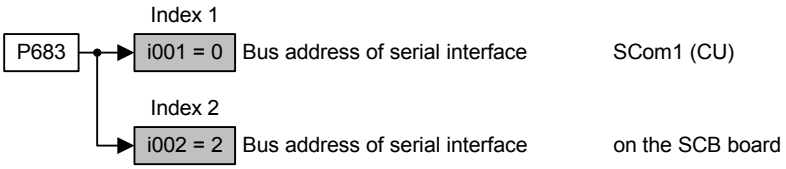

Data sets

"Indexed" parameters are divided according to data sets (indexed).

- GRD/RES (basic or reserve setting):
  These data sets make it possible, e.g. to switch from manual to automatic mode.
- RDS (reserve data set) 1 or 2:
  Two reserve data sets can be parameterized, e.g. for alternating operation of different converter types on one AFE.

The data sets are selected via the "control word" and read out in r012 and r152, see Section "Function Diagrams".

10 Function Diagrams

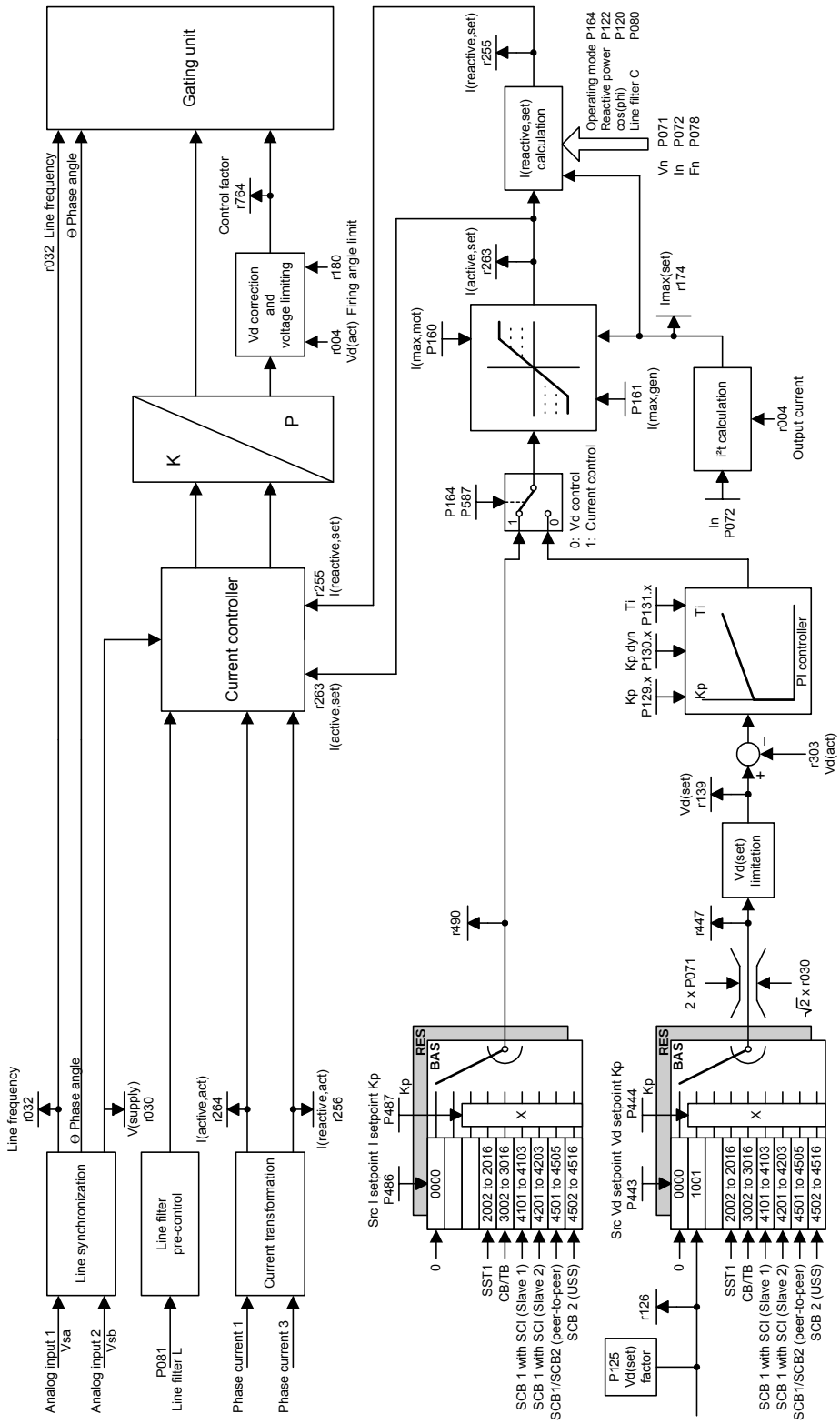

Fig. 10-1 Block diagram of the AFE control

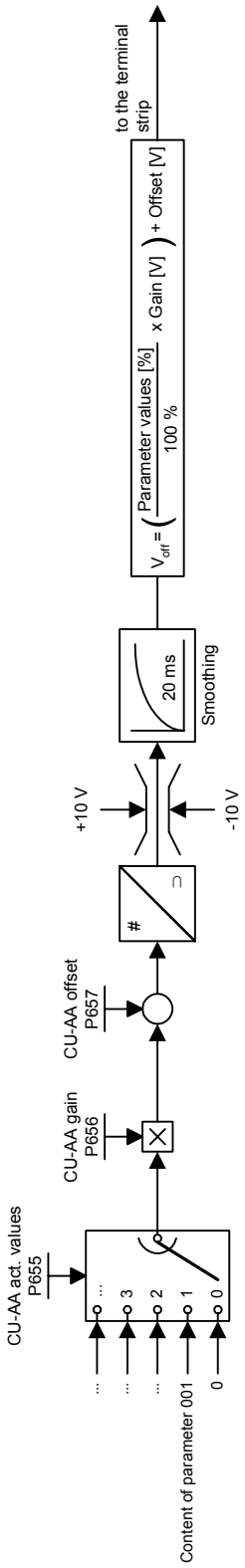

Fig. 10-2 Analog output

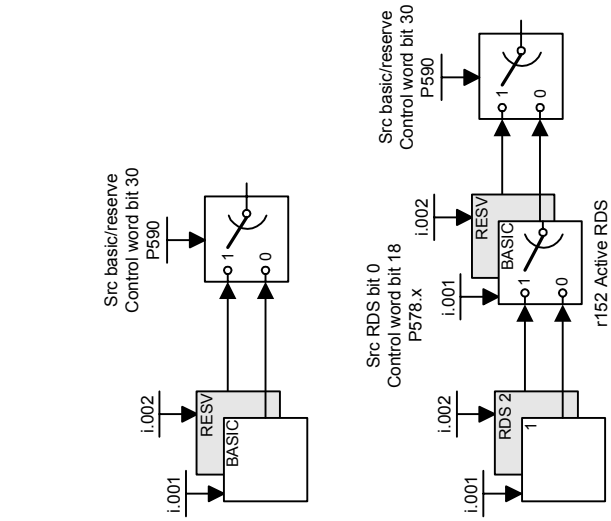

Fields which can be switched over have a shaded background.

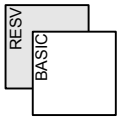

Switchover, basic/reserve setting (Basic/Resv)

Parameters involved:
P443, P444, P486, P487, P554 to P589

Switchover of reserve data set (RDS)

Parameters involved:
P120, P121, P122, P124, P129, P130, P131, P160, P161, P164, P173, P326, P366, P408, P517, P518

Fig. 10-3 Basic/reserve changeover

11 Parameterization

The functions stored in the converters are adjusted to suit specific applications by means of parameters. Every parameter is uniquely identified by its name and number. In addition to a parameter name and number, many parameters also have a parameter index. Using these indices, it is possible to store several values for a parameter under one parameter number.

Parameter numbers consist of a letter and a three-digit number. Upper case letters P, U, H and L are the codes for settable parameters and lower case letters r, n, d and c the codes for non-settable visualization parameters.

Examples

DC link voltage r006 = 541	Parameter name:	DC link voltage
	Parameter number:	r006
	Parameter index:	No index
	Parameter value:	541 V
Src ON/OFF1 P554.2 = 20	Parameter name:	Src ON/OFF1
	Parameter number:	P554
	Parameter index:	2
	Parameter value:	20

Parameters can be entered via

- the PMU parameterizing unit integrated in the converter front panel,
- the control terminal strip of the closed-loop control module CUSA (see Section "Control terminals"),
- easily via the optional OP1S operator panel,
- the serial interfaces RS485 and RS232 at -X300 on the PMU or
- on a PC with the DriveMonitor service program (Version 5.3 or higher).

The parameters stored in the converters can be altered only under particular conditions. The following conditions must be fulfilled before parameter settings can be changed:

- The relevant parameter must be a settable parameter (identifiable by upper case code letters in parameter number).
- Parameterization authorization must be set (P053 = 6 for parameterization via PMU or OP1S).
- Changes to parameter settings must be permitted by the current converter status (initial parameter settings must be set with the converter switched off).

11.1 Setting parameters via the PMU

The parameterization unit (PMU) is provided for direct parameterization, operation and visualization of the converter/inverter. It is an integral component of basic units and features a four-digit, seven-segment display and several keys.

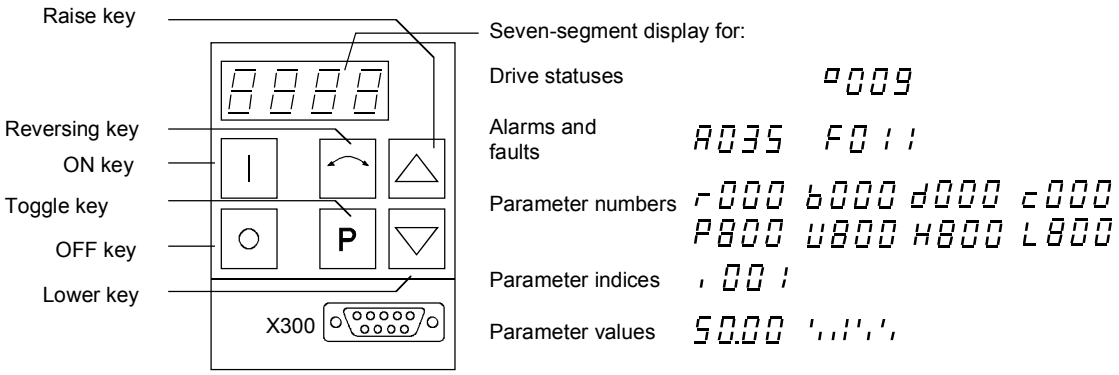

Fig. 11-1 PMU parameterization unit

Key	Meaning	Function
I	ON key	• Switch on device (standard) • With active fault: Return to fault display • Command is executed when key is released
O	OFF key	• Switch off device with OFF1 or OFF2 depending on parameterization (P554 to P557). Command is executed when key is released.
⌒	Reversing key	• No function
P	Toggle key	• For switching between parameter number and parameter value in the sequence indicated (command becomes effective when the key is released). • If fault display is active: For acknowledging the fault
△	Raise key	Increase the display value: • Press and release: Increase value by one increment • Hold down: Value is increased rapidly
▽	Lower key	Reduce the display value: • Press and release: Decrease value by one increment • Hold down: Value is decreased rapidly
P + △ P + ▽	Hold toggle key and depress raise or lower key	• Press and hold P, then press second key. The command is executed when key is released (e.g. quick toggle).

Table 11-1 Control elements on the PMU

Toggle key (P key)

Since the seven-segment display on the PMU has only four digits, the 3 descriptive elements of a parameter, i.e.

- parameter number,
- parameter index (for an indexed parameter) and
- parameter value

cannot be displayed simultaneously. It is therefore necessary to switch between the 3 elements. The toggle key is provided for this purpose. After the desired level has been selected, the parameter number can be adjusted with the Raise or Lower key.

Using the toggle key, you can switch

- from the parameter number to the parameter index
- from the parameter index to the parameter value
- from the parameter value to the parameter number

If the parameter is not indexed, the toggle key switches directly from the parameter number to the parameter value.

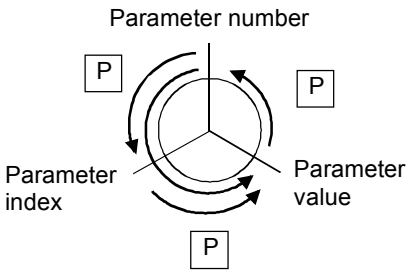

NOTE

If you change the value of a parameter, the new value normally becomes operative immediately. However, in the case of confirmation parameters (identified by an asterisk " * " in the Parameter List), the new value does not take effect until you switch from the parameter value to the parameter number.

Changes to parameter settings made via the PMU are always stored in the non-volatile EEPROM after confirmation by the toggle key.

Example

The following example shows the sequence of operator inputs via the PMU required to select operating mode "Reactive power compensation".

Set P052 to 5: Closed-loop control settings

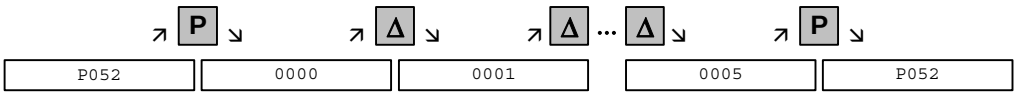

Increase number to P164: Select operating mode

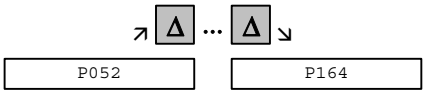

Set P164 to 0: Reactive power compensation

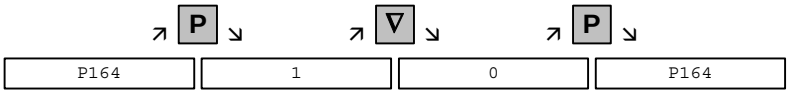

Return to P052: Function selection

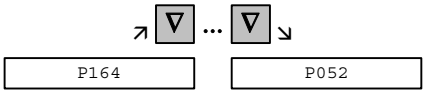

Set P052 to 0: Return to previous operating state

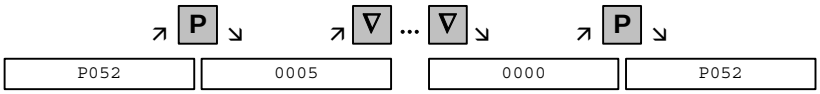

11.2 "Start-up" parameterization

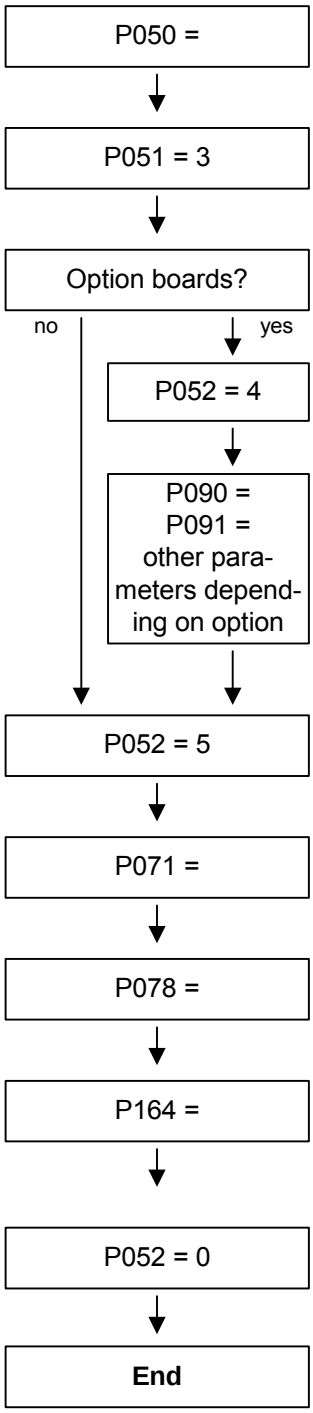

Select language:
0 = Deutsch, 1 = English, 2 = Espanol, 3 = Fracais, 4 = Italiano

Access level "Expert Mode"

Possible option boards: SCB, CB, TB, TSY

Select "Hardware Configuration"

Define and parameterize option boards:
Option boards: 0: None
1: CB
2: TB
3: SCB
4: TSY
(right-hand slot P090, centre slot P091)

Menu selection "Closed-loop control settings":
If fault "Fxxx" appears, see Section "Fault and alarm messages"

Input rated supply voltage in V

Input line frequency in Hz

Operating mode:
0: Reactive power compensation mode
1: cos(phi) mode
2: Current control
3: Regenerative partial load

Select function "Return"

11.2.1 Function selection (P052)

Start-up functions are selected via parameter **P052**. These provide start-up variants specially adapted to start-up mode.

Precondition

Access stage 2 **(P051 = 2)** must be enabled and the AFE infeed must not be set to OPERATION (014).

The following functions are available:

- Return from function selection (P052 = 0)
- Factory setting (P052 = 1)
- Initialization (P052 = 2)
- Download (P052 = 3)
- Hardware configuration (P052 = 4)
- Closed-loop control setting (P052 = 5)
- Forming (P052 = 20)

The "Factory setting" and "Forming" functions are reset automatically on completion, i.e. P052 = 0 (return)!

All other functions must be reset manually.

11.2.2 Factory setting (P052 = 1) (Parameter reset)

Function

This function resets all parameters (see Section "Parameter List") to their factory values (supplied defaults). Please note the setting of P077!

Condition

The "Factory setting" function can be selected in operating states CONTROL SETTINGS (005), FAULT (007), STARTING LOCKOUT (008) or READY FOR ON (009).

Result

This function sets some converter data according to the device type (dependent on MLFB / P070).

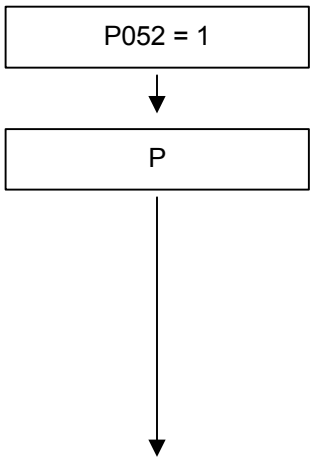

Select factory setting (Parameter reset)

The numbers of the newly set parameters are displayed consecutively:

- **All** parameters set to factory values acc. to Parameter List (even board configuration P090/P091)
- Device data (derived from MLFB of converter (P070))
  P071 Rated supply voltage
  P072 AFE current (n)
  P078 Line frequency (n)
- Open-loop/closed-loop control parameters
  P173 Imax (maximum current)

When the parameter have been set to their factory values, status display STARTING LOCKOUT (008) or READY FOR ON (009) appears.

11.2.3 Initialization (MLFB input) (P052 = 2)

Function This function is used to alter the order number (device type) of the converter.

Condition "Initialization" can be selected in operating states CONTROL SETTINGS (005), FAULT (007), STARTING LOCKOUT (008) or READY FOR ON (009).

Result When the order number is **changed,** only **some** parameters are reset to their factory values (shipped status of converter) as a function of the new order number. The process data connection remains unchanged.

P051 = 3

Access level "Expert Mode"
(to change P070)

↓

P052 = 2

Select Initialization

↓

P070 =

Specify MLFB
(= Order No. of the AFE inverter, see rating plate)
When the CU board is changed, the appropriate MLFB for the converter must be entered. When setting parameters via PMU, enter the corresponding code number (PWE) according to the table below.

↓

Rated voltage 3 AC 380 V (-20 %) to 460 V (+5 %)			
Order number 6SE70..	**Type power** [kW]	**Rated current** [A]	**PWE**
32-1EG80	110	210	103
32-6EG80	132	260	109
33-2EG80	160	315	113
33-7EG80	200	370	117
35-1EJ80	250	510	120
36-0EJ80	315	560	123
37-0EJ80	400	656	126
31-0EE80	45	92	75
31-2EF80	55	124	83
31-5EF80	75	146	91
31-8EF80	90	186	99

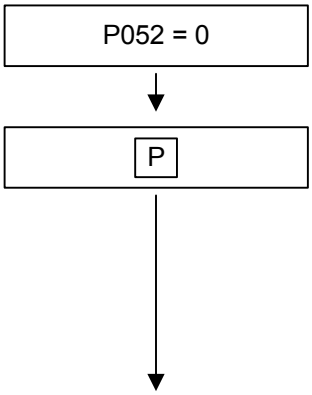

Select "Return"

The **operating display** appears and, if the MLFB has been altered, the following parameters are set to new values: Converter and motor data (as derived from converter MLFB (P070)) and open-loop and closed-loop control parameters ("Automatic parameterization" on all data sets analogous to selection of "Factory setting" function).
The process data connections (e.g. analog inputs/outputs) remain unchanged.

On completion of initialization, status display STARTING LOCKOUT (008) or READY FOR ON (009) appears.

11.2.4 Download (P052 = 3)

Function This function is used to read and alter parameters by means of a PC connected to the SCom1 basic converter interface.

Condition Parameters can be "downloaded" in the FAULT (007), STARTING LOCKOUT (008) or READY FOR ON (009) states.

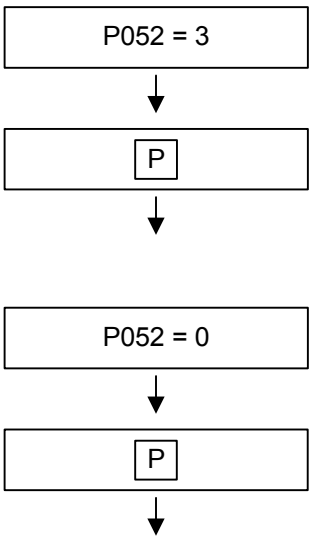

Select "Download"

The **operating display** (021) appears.
Using a PC connected to basic converter interface SST1 and an appropriate application program (e.g. DriveMonitor), it is now possible to read and alter all parameters irrespective of the selected control mode, etc.

Select "Return"

After Return, the STARTING LOCKOUT (008) or READY FOR ON (009) display appears.

11.2.5 Hardware configuration (P052 = 4)

Function The purpose of this function is to define option boards (SCB, TSY, CB, TB) installed in the electronics box of the converter.

Condition The "Hardware configuration" function can be selected in the FAULT (007), STARTING LOCKOUT (008) or READY FOR ON (009) states. The LBA bus link (Local Bus Adapter) is required additionally to install option boards in the electronics box. See Section "Interfaces".

Result All parameters which can be written in the "Hardware configuration" state ("H", see right-hand column in "Parameter List") can be altered.

P052 = 4 — **Select "Hardware configuration"**

↓

P051 = 3 — **Access level "Expert Mode"**
(to be able to alter the following parameters)

↓

P090 =
P091 =

Board in slot 2 (**RIGHT** in electronics box)
Board in slot 3 (**CENTRE** in electronics box!)

Parameter values for P090/P091:
0: No option board
1: CB Communication Board
2: TB Technology Board (P090 only)
3: SCB Serial Communication Board
4: TSY Digital Tacho and Synchronization Board

Slot in electronics box		Boards
Left	Slot 1 (CU)	CUSA
Centre	Slot 3 (options)	CB / SCB1 / SCB2 / (TSY, not with TB)
Right	Slot 2 (options)	CB / SCB1 / SCB2 / TSY / TB

NOTE

- Only one of each option board type may be inserted in the electronics box at one time.
- Technology boards (e.g. T300) must always be inserted in slot 2. The TSY board may not be inserted at the same time as a TB.
- If only one option board is in use, it must always be inserted in slot 2.

♦ Other parameters depending on option boards (see relevant Operating Instructions or Parameter List).

♦ Make selection between:

P052 = 5 — **Select "Closed-loop control settings"**
(see Section "Closed-loop control settings")

↓

P052 = 0 — **Select "Return"**

↓

P — The **operating display** (r000) appears. At the same time, parameters and internal quantities are set to new values depending on the function selection.

↓

The hardware is initialized.
If one of the fault messages F050/F070/F080 appears, see Section "Fault and alarm messages".

On completion of the selected function, operating display STARTING LOCKOUT (008) or READY FOR ON (009) appears.

11.2.6 Closed-loop control settings (P052 = 5)

Function This function is used to alter the closed-loop control settings (AFE data).

Condition The "Closed-loop control settings" can be made in the FAULT (007), STARTING LOCKOUT (008) or READY FOR ON (009).

Result All parameters which can be written in the "Closed-loop control settings" state ("A", see right-hand column in Parameter List) can be altered by this function.

"Closed-loop control settings" is terminated by resetting the status (P052 = 0) with calculation of internal quantities.

P052 = 5 — **Select "Closed-loop control settings"**

↓

P051 = 3 — **Access level "Expert Mode"**
(in case parameters which require Export Mode need to be altered)

↓

Change selected parameters which can be altered in the "Closed-loop control settings" state.

P052 = 0 — **Select "Return"**

↓

P — The **operating display** (r000) appears. At the same time, parameters and internal quantities are set to new values depending on the function selection.

↓

On completion of the selected function, operating display STARTING LOCKOUT (008) or READY FOR ON (009) appears.

12 Parameter List

General Visualization Parameters	to 49	Analog Input/Output	from 650
General Parameters	from 50	Interface Configuration	from 680
Drive Data	from 70	Diagnostic Functions	from 720
Hardware Configuration	from 89	Gating Unit	from 760
Motor Data	from 100	Factory Parameters	from 780
Control	from 150	Special Parameters	from 800
Functions	from 330	Profile Parameters	from 900
Setpoint Channel	from 410	Tech Board Parameters	from 1000
Control and Status Bit Connections	from 550		

Key to parameter list

Example:

PNU ***:conf-P**	**Parameter Name in OP1** **Description**	**Range** **[Unit]** **Value Texts**	**# of Indices** **Factory Settings**	**read: _/_** **write: _/_**
P999 ***1)** 3E7Hex	**"Parameter Name in OP1"** "Description" RDS(2) parameter**6)** Type=I2; **2)** PKW: 1Hex=0.01 Hz; PZD Gr.: 0**3)**	–300.00 to 300.00 [Hz]	2 i001=50.00 i002=50.00 or: ←**7)**	2**5)**/ BR**4)** 2**5)**/ BR**4)**

1) Confirmation parameter: Does not become active until confirmation (press P key)

2) Parameter type
- O2 Unsigned 16-bit value
- I2 Signed 16-bit value
- L2 Nibble-coded quantity
- V2 Bit-coded quantity

3) Normalization group for PZD

PZD group	PZD normalization	
	0 as PKW normalization	
	61000Hex = P072 I(n,AFE)	
	71000Hex = P071 V(n,supply)	
Abbreviations:	PZD	Process Data
	PKW	Parameter Characteristic Value

4) Operating states:
- U MLFB Input (initialization)
- H Hardware Configuration
- A Control Settings
- B Ready (including Fault)
- R Run

5) Minimum access level which is needed to read or write a parameter.
- 1 Operation via PMU/OP
- 2 Standard Mode
- 3 Expert Mode

6) Abbreviations for indexed parameters
- RDS(2) Reserve data set parameter with 2 indices, switched over via control word 2, bit 18
- B/R Parameter with switchover option for basic and reserve setting in control word 2, bit 30

7) Parameter value is set to a default after initialization. Default settings are determined by the converter MLFB.

12.1 General visualization parameters

PNU *:conf-P	Parameter Name in OP1 Description	Range [Unit] Value Texts	# of Indices Factory Settings	read: _/_ write: _/_
r000	**Operation Display** Displays the operating status, fault and alarm messages See Section “Operator control" for a description		–	1 /UHABR
r001 1Hex	**Operating status** Visualization parameter indicating the current operating state of the AFE Description 0 = AFE MLFB input 1 = AFE initialization 2 = Hardware initialization 3 = Closed-loop control initialization 4 = Hardware settings (H) 5 = Closed-loop control settings (A) 7 = Fault 8 = Starting lockout 9 = Ready for ON 10 = DC-link precharging 11 = Ready to run 14 = Run 18 = Forming 21 = Downloading parameter settings .... Analog output: 100 % with code number (PWE) = 16384 Type = O2; PKW: 1HEX=1 PZD Gr.: 0	MLFB Input Init. MLFB H/W Init System Init H/W Setting System Set. Fault ON locked Rdy ON Precharging Rdy Run Operation Capacitor forming Download	–	2 /UHABR
r004 4Hex	**Output Amps** AFE output current (fundamental r.m.s.) Note: The displayed value corresponds to the current at the inverter (CT). The line current at the AFE input deviates from this value by the current component which flows through the filter capacitor. Analog output: 100 % with code number (PWE) = 4 * P072 Type=O2; PKW: 1HEX=0.1 A PZD Gr.: 6	[A]	–	2 / BR
r006 6Hex	**DC Bus Volts** Actual DC-link voltage value Display quantity for the PMU and OP. Analog output: 100 % with code number (PWE) = 4*P071 Type=I2; PKW: 1HEX=1 V PZD Gr.: 7	[V]	–	2 / BR
r010 AHex	**AFE utilization** Thermal AFE utilization as a result of an I2t calculation of the output current. Loading the AFE with maximum current for • 30 seconds activates an alarm (P622) and for • 60 seconds to a reduction in the load current to 91 % of AFE rated current. Analog output: 100 % with code number (PWE) = 16384 % Type=O2; PKW: 1HEX=1 % PZD Group: 0	[%]	–	2 / BR

PNU *:conf-P	Parameter Name in OP1 Description	Range [Unit] Value Texts	# of Indices Factory Settings	read: _/_ write: _/_
r012 CHex	**Base/Reserve** Basic/reserve settings of the process data connections for setpoints and control word bits Parameter values: 0: Basic setting 1: Reserve setting Analog output: 100 % with code number (PWE) = 16384 Type=O2; PKW: 1HEX=1 PZD Gr.: 0	 Basic Reserve	–	2 / BR
r013 DHex	**Operat. hours** Display of hours run with enabled inverter (in Run operating state). Indices: i001 = Days: Days (0...9999) i002 = Hrs.: Hours (0...24) i003 = Sec.: Seconds (0...3600) Type=O2; PKW: 1HEX=1 PZD Gr.: 0	 d h s	3	2 / BR
r030 1EHex	**Line volts** Actual line voltage (fundamental r.m.s.) Analog output: 100 % with code number (PWE) = 4 * P071 Type=O2; PKW: 1HEX=1 V PZD Gr.: 7	 [V]	–	2 / BR
r032 20Hex	**Line frequency** Actual frequency of line voltage Analog output: 100 % with code number (PWE) = 163.84 Hz Type=O2; PKW: 1HEX=0.01 Hz PZD Gr.: 0	 [Hz]	–	2 / BR

12.2 General parameters

PNU *:conf-P	Parameter Name in OP1 Description	Range [Unit] Value Texts	# of Indices Factory Settings	read: _/_ write: _/_
P050 * 32Hex	**Language** Plain text display language on the optional OP operator panel and in the DriveMonitor PC program Parameter values: 0: German 1: English 2: Spanish 3: French 4: Italian Type=O2; PKW: 1HEX=1 PZD Gr.: -	0 to 5 Deutsch English Espanol Francais Italiano	– 0	2 /UHABR 2 /UHABR
P051 * 33Hex	**Access Level** Access level setting; the higher the access level, the more parameters can be accessed for reading and writing. Parameter values: 1: Operation via PMU/ OP 2: Standard mode 3: Expert mode Type=O2; PKW: 1HEX=1 PZD Gr.: -	1 to 3 Operation Standard Expert	– 2	1 /UHABR 1 /UHABR
P052 * 34Hex	**Function Select** Selection of various commissioning steps and special functions. Parameter values: 0 = Return to the previously active drive status from one of the functions described below. 1 = Parameter Reset: All parameters are reset to their original settings (factory settings). According to the Profibus profile for variable speed drives this function is also accessible via parameter P970. On completion of this function, the parameter is automatically reset to 0. 2 = Enable MLFB setting mode (switch to MLFB Input operating status). The function can be deselected only by resetting the parameter to 0 (Return). 3 = Download/upread (switch to Download operating status). The function can be deselected only by resetting the parameter to 0 (Return). 4 = Hardware configuration (switch to Hardware Settings operating status). The function can be deselected only by resetting the parameter to 0 (Return). 5 = Closed-loop control settings (switch to Closed-Loop Control Settings operating status to parameterize plant data). The parameter must be reset to 0 (Return) to exit the function without modifying parameters internally. 20 = Forming Type=O2; PKW: 1HEX=1 PZD Gr.: -	0 to 20 Return Par. Reset Set MLFB Download H/W Setting Drive Setting Capacitor forming	– 0	2 /UHABR 2 /UHAB

PNU *:conf-P	Parameter Name in OP1 Description	Range [Unit] Value Texts	# of Indices Factory Settings	read: _/_ write: _/_
P053 * 35Hex	**Parameter access** Release of interfaces for parameterization. This parameter can always be written at any time from any interface. Parameter values: 0: None 1: COM BOARD (CB) 2: BASE KEYPAD (PMU) 4: BASE SERIAL (SST1) (SST1 and OP) 8: Serial I/O (SCB with USS) (SCB) 16: TECH BOARD (TB) Setting instructions: • Every interface is numerically coded. • Entering the number or the product of several different numbers assigned to different interfaces releases the relevant interface(s) for utilization as a parameterizing interface. Example: A factory setting of 6 indicates that interfaces BASE KEYPAD (PMU) and BASE SERIAL (SST1) are released as parameterizing interfaces. Type=O2; PKW: 1HEX=1.0 PZD Gr.: -	0 to 31	– 6	1 /UHABR 1 /UHABR
P054 36Hex	**OP Backlight** Backlighting for operator panel Parameter values: 0 = Panel is always backlit 1 = Panel is only backlit when in use Type=O2; PKW: 1HEX=1 PZD Gr.: -	0 to 1	– 0	3 / BR 3 / BR

12.3 Drive data

PNU *:conf-P	Parameter Name in OP1 Description	Range [Unit] Value Texts	# of Indices Factory Settings	read: _/_ write: _/_
P070 * 46Hex	**MLFB(6SE70..)** MLFB (order number) of basic unit For parameter values, see Section "Initialization" Type=O2; PKW: 1HEX=1 PZD Gr.: -	0 to 255	– 0	3 /U BR 3 /U
P071 47Hex	**Line volts** Line supply voltage for AFE (r.m.s. of line-to-line voltage) This parameter specifies the incoming AC supply voltage. It is used to calculate the setpoint DC link voltage (P125) and the thresholds for fault messages "Line supply overvoltage", "Line supply undervoltage" (P074) and "DC link undervoltage". Type=O2; PKW: 1HEX=1 V PZD Gr.: 0	90 to 1320 [V]	– ←	2 / ABR 2 / A
P072 48Hex	**AFE current(n)** AFE rated output current Type=O2; PKW: 1HEX=0.1 A PZD Gr.: 0	4.0 to 6540.0 [A]	– ←	2 /U ABR 4 /U
P074 4AHex	**Undervoltage threshold** Response threshold for shutdown on line undervoltage. The line supply voltage (P071) is the reference quantity. Note: P155: Maximum power failure time Type=O2; PKW: 1HEX=1 % PZD Gr.: –	6 to 100 [%]	– 65	2 / BR 2 / BR
P077 * 4DHex	**FactSettingType** Selective factory setting This parameter can be changed in the "MLFB Input" state (P052). If no MLFB has yet been entered, the selected factory setting type becomes effective immediately an MLFB number is entered and "MLFB Input" deselected (P052=0). It is possible to activate a specific factory setting by selecting "Par. Reset" (P052 = 1 or P970 = 0). This action does not, however, change the setting in P077. Parameter values: 0: Current factory setting remains valid. 1: AFE with OP: ⇒not currently implemented 2: AFE cabinet unit with terminal strip: This setting initializes the following parameters to values other than zero: P554, P566, P603 3: Current factory setting remains valid. 3: AFE cabinet unit with OP: ⇒not currently implemented Type:O2; PKW: 1HEX=1 PZD Gr.: -	0 to 4	– 0	3 /U BR 3 /U
P078 4EHex	**Line frequency** Frequency of incoming AC supply Type=O2; PKW: 1HEX=1 Hz PZD Gr.: –	50 to 60 [Hz]	– 50	2 / ABR 2 / A
P080 50Hex	**Line filter C/mF** Capacitance of the filter capacitors of one phase of the AFE line filter in mF for a "star circuit configuration". If the line filter capacitors are connected in a “delta configuration”, then 300% of the value must be parameterized. Type=O2; PKW: 1HEX=0.001 PZD Gr.: 0	0.000 to 10.000	– 0.000	3 / BR 3 / BR

PNU *:conf-P	Parameter Name in OP1 Description	Range [Unit] Value Texts	# of Indices Factory Settings	read: _/_ write: _/_
P081 51Hex	**Line filter L/mH** Inductance L of AFE filter reactor in mH. Type=O2; PKW: 1HEX=0.001 PZD Gr.: 0	0.000 to 20.000	– ←	3 / BR 3 / BR
r082 52Hex	**Line filter L/%** Inductance L of AFE filter reactor in % (calculated from P081). Analog output: 100 % with code number (PWE) = 1638.4 % Type=O2; PKW: 1HEX=0.1 % PZD Gr.: 0	[%]	–	3 / BR
P083 53Hex	**R precharging** Precharging resistance in ohms. Type=O2; PKW: 1HEX=0.1 Ohm PZD Gr.: 0	0.0 to 1000.0 [ohms]	– 0.0	3 / BR 3 / B
r089 59Hex	**Board Position 1** Board in slot 1 (left) in electronics box Parameter values: 0 = None (formal setting only) 6 = CUSA board for AFE Analog output: 100 % with code number (PWE) = 16384 Type=O2; PKW: 1HEX=1 PZD Gr.: 0	None AFE	–	3 / H BR

12.4 Hardware configuration

PNU *:conf-P	Parameter Name in OP1 Description	Range [Unit] Value Texts	# of Indices Factory Settings	read: _/_ write: _/_
P090 * 5AHex	**Board Position 2** PCB in slot #2 (right) of the electronics box Parameter values: 0 = No option board 1 = Communication Board (CB) 2 = Technology Board (TB) 3 = Serial Communication Board (SCB) 4 = Digital Tacho and Synchronization Board (TSY) Setting instruction: The following are the only permissible board/slot combinations: Slot 3 (P091) Slot 2 (P090) - CB - TB - SCB - TSY SCB CB CB TB SCB TB CB SCB CB TSY TSY CB SCB TSY TSY SCB Type=O2; PKW: 1HEX=1.0 PZD Gr.: -	0 to 4 None CB TB SCB TSY	– 0	3 / H BR 3 / H
P091 * 5BHex	**Board Position 3** Board in slot 3 (centre) in electronics box For description, see P090 (board position 2). Type=O2; PKW: 1HEX=1.0 PZD Gr.: -	0 to 4	– 0	3 / H BR 3 / H

12.5 Closed-loop control

PNU *:conf-P	Parameter Name in OP1 Description	Range [Unit] Value Texts	# of Indices Factory Settings	read: _/_ write: _/_
P120 78Hex	**CosPhi set** Power factor cos(PHI) setpoint. Parameter values: 0.800 ... 1.000 ⇒ inductive -0.800 ... -1.000 ⇒ capacitive RDS(2) parameter Type=I2; PKW: 1HEX=0.001 PZD Gr.: 4000HEX=4	–1.000 to 1.000	2 i001=1.000 i002=1.000	3 / BR 3 / BR
P122 7AHex	**React. pow.(set)** Reactive power setpoint for “reactive power compensation” mode (P164 = 0). Parameter values: Reactive power setpoint < 0 ⇒ inductive Reactive power setpoint > 0⇒ capacitive RDS(2) parameter Type=I2; PKW: 1HEX=0.1 % PZD Gr.: 4000HEX = 400%	–140.0 to 140.0 [%]	2 i001=0.0 i002=0.0	3 / BR 3 / BR
r123 7BHex	**Reactive power/kVAr** Reactive power setpoint in kVAr calculated from P122 (for the line supply voltage P071) for “reactive power compensation” mode (P164 = 0) Analog output: 100 % with code number (PWE) = 1638.4 kVA Type=I2; PKW: 1HEX=0.1 kVA PZD Gr.: 0	[kVAr]	–	3 / BR
P124 7CHex	**Sm.react.pow.** Smoothing time constant for reactive power setpoint specified in P122. RDS(2) parameter Type=O2; PKW: 1HEX=1 ms PZD Gr.: 0	0 to 900 [ms]	2 i001=50 i002=50	3 / BR 3 / BR
P125 7DHex	**Vd(set) factor** Factor for the fixed setpoint of the DC link voltage. The line supply voltage (P071) is the reference quantity. Visualization parameters: r126: Vd fixed setpoint r447: Vd setpoint of setpoint node (P443) r139: Vd setpoint Type=O2; PKW: 1HEX=0.01 PZD Gr.: –	1.42 to 1.90	– 1.58	3 / BR 3 / BR
r126 7EHex	**Vd (set, par)** Fixed setpoint for the DC link voltage setpoint V (calculated from P125) Note: Settable via P125 Vd(set) factor Analog output: 100 % with code number (PWE) = 4 x P071 Type=O2; PKW: 1HEX=1 V PZD Gr.: 7	[V]	–	3 / BR
P129 81Hex	**Vd reg. Kp** Gain of DC-link voltage (Vd) controller RDS(2) parameter Type=O2; PKW: 1HEX=0.1 PZD Gr.: 0	0.0 to 31.9	2 i001=2.0 i002=2.0	3 / BR 3 / BR
P130 82Hex	**Vd reg. Kp dyn** Dynamic gain of DC-link voltage (Vd) controller RDS(2) parameter Type=O2; PKW: 1HEX=0.1 PZD Gr.: 0	0.0 to 31.9	2 i001=10.0 i002=10.0	3 / BR 3 / BR

PNU *:conf-P	Parameter Name in OP1 Description	Range [Unit] Value Texts	# of Indices Factory Settings	read: _/_ write: _/_
P131 83Hex	**Vd regulator Ti** Integration time constant of the DC-link voltage (Vd) controller RDS(2) parameter Type=O2; PKW: 1HEX=0.1 ms PZD Gr.: 0	0.5 to 100.0 [ms]	2 i001=20.0 i002=20.0	3 / BR 3 / BR
r139 8BHex	**Ud (set)** Setpoint of DC-link voltage in V Note: The Vd setpoint (r139) can be higher than the set Vd setpoint (r447). For a high line supply voltage and/or a high capacitive reactive current, the DC link voltage is automatically increased so that a minimum modulation reserve is maintained. Analog output: 100 % with code number (PWE) = 4 x P071 Type=O2; PKW: 1HEX=1 V PZD Gr.: 7	[V]	–	3 / BR
r150 96Hex	**Control status** Status word of the closed-loop control Parameter values: Bit00 = 1: Initialization of closed-loop control complete Bit01 = 1: Ext. 24V power supply faulted Bit02 = Reserved Bit03 = 1: Precharging completed Bit04 = 1: Active current >= 0 (motoring, rectifier operation) Bit05 = 1: Reactive current >= 0 (capacitive) Bit06 = 1: Active current at limit Bit07 = 1: Reactive current at limit Bit08 = 1: Absolute current value at limit (r174) Bit09 = 1: Smoothed line supply voltage < 80 % of P071 Bit10 = 1: Smoothed line supply voltage > 105 or 110 % of P071 Bit11 = 1: Control factor at limit Bit12 = 1 Ud2t integrator increasing Bit13 = 1 DC link voltage < 90% of setpoint Bit14 = 1 DC link voltage > 110% of setpoint Bit15 = 1 Smoothed line supply voltage < P074 Coding of bits on the PMU: 15 14 13 12 11 10 9 8 7 6 5 4 3 2 1 0 Type=V2; PKW: 1HEX=1 PZD Gr.: 0		–	3 / BR
r152 98Hex	**Active RDS** Active reserve data set of the AFE Analog output: 100 % with code number (PWE) = 16384 Type=O2; PKW: 1HEX=1 PZD Gr.: 0		–	2 / ABR

PNU *:conf-P	Parameter Name in OP1 Description	Range [Unit] Value Texts	# of Indices Factory Settings	read: _/_ write: _/_
P155 9BHex	**max. t. pow.fail** Maximum time until the power failure fault (F009) or line supply undervoltage fault (F004) is output. If the unsmoothed line supply voltage falls below the threshold parameterized in P074, the inverter firing pulses are inhibited. The main contactor remains closed. If the line supply voltage does not increase above the minimum threshold (P074) within the maximum time for a power failure, the power failure fault F009 is output and the main contactor is opened (de-energized). If the smoothed line supply voltage falls below the threshold parameterized in P074, fault message F004 "line supply undervoltage" is output. Type=O2; PKW: 1HEX=1 s ZD-Gr.: 0	0 to 3000 [ms]	– 100	3 / BR 3 / BR
P160 A0Hex	**I start(mot,max)** Maximum current limit for motor operation. The line current is limited by this parameter. RDS(2) parameter Type=I2; PKW: 1HEX=0.1 % PZD: 4000HEX = 400 %	0.0 to 150.0 [%]	2 i001=150.0 i002=150.0	3 / ABR 3 / A
P161 A1Hex	**I start(gen,max)** Maximum regenerative current limit. The regenerative feedback current is limited to the value set here..0 RDS(2) parameter Type=I2; PKW: 1HEX=0.1 % PZD: 4000HEX = 400 %	–150.0 to 0.0 [%]	2 i001=-150.0 i002=-150.0	3 / ABR 3 / A
P164 A4Hex	**Operating mode** Selection of the operating mode Parameter values: 0: Operating mode “reactive power compensation” The setpoint for the reactive power can be set via P122. 1: Operating mode "cos(PHI)" The setpoint for the cos(PHI) can be set via P120. 2: Operating mode "closed-loop current control" The source of the current setpoint must be entered via P486. 3: Regenerative partial load RDS(2) parameter Type=O2; PKW: 1HEX=1 PZD Gr.: –	0 to 2	2 i001=1 i002=1	3 / ABR 3 / A

PNU *:conf-P	Parameter Name in OP1 Description	Range [Unit] Value Texts	# of Indices Factory Settings	read: _/_ write: _/_
P173 ADHex	**Imax** Maximum current (fundamental r.m.s.) Setpoint for current limitation (Imax controller) to protect the AFE. Maximum 1.36 x conv.current(n) (P072). Visualization parameters: r174: Actually applied maximum current setpoint (taking derating into account) Note: The maximum current set here must always be so high so that the AFE can handle the power demanded by the drive. If the drive demands more current than the maximum current set here, the AFE shuts down with the “overload” fault (F013). RDS(2) parameter Type=O2; PKW: 1HEX=1 A PZD Gr.: 6	1 to 30000 [A]	2 i001=← i002=←	3 / BR 3 / BR
r174 AEHex	**Imax(set)** Maximum current (setpoint applied) Setpoint applied for current limiting (Imax controller); takes into account the effect of the I²t calculation Note: P173 (parameterized maximum current setpoint) Analog output: 100 % with code number (PWE) = 40 x P072 Type=O2; PKW: 1HEX=1 A PZD Gr.: 6	[A]	–	3 / BR
r179 B3Hex	**Output Amps (rms)** Output current (fundamental rms) (fast actual value for automation purposes) Analog output: 100 % with code number (PWE) = 4*P072 Type=O2; PKW: 1HEX=0.1 A PZD Gr.: 6	[A]	–	3 / BR
r255 FFHex	**I (reactive,set)** Reactive current component setpoint. Limited by the maximum current (r174) and the active current setpoint (r263). Analog output: 100 % with code number (PWE) = 4 x P072 Type=I2; PKW: 1HEX=0.1 A PZD Gr.: 6	[A]	–	3 / BR
r256 100Hex	**I (reactive,act)** Actual value of reactive current component Analog output: 100 % with code number (PWE) = 4 x P072 Type=I2; PKW: 1HEX=0.1 A PZD Gr.: 6	[A]	–	3 / BR
r263 107Hex	**I (active,set)** Setpoint of active current component. Limited by the maximum current (r174). Analog output: 100 % with code number (PWE) = 4 x P072 Type=I2; PKW: 1HEX=0.1 A PZD Gr.: 6	[A]	–	3 / BR
r264 108Hex	**I (active,act)** Actual value of active current component Analog output: 100 % with code number (PWE) = 4 x P072 Type=I2; PKW: 1HEX=0.1 A PZD Gr.: 6	[A]	–	3 / BR

PNU *:conf-P	Parameter Name in OP1 Description	Range [Unit] Value Texts	# of Indices Factory Settings	read: _/_ write: _/_
r303 12FHex	**Vd(act)** Actual unsmoothed DC-link voltage value Analog output: 100 % with code number (PWE) = 4 x P071 Type=I2; PKW: 1HEX=1 V PZD Gr.: 7	[V]	–	3 / BR
P308 134Hex	**Sampling Time** Basic sampling time T0. Setting instructions: • When the sampling time is reduced, the available computing time should be checked via parameter r725 in the "Run" state. At least 5 % of the available computing time should always be left in reserve to avoid any delayed (slow) execution of operator inputs. • If fault F042 "Computing time" occurs, the sampling time setting must be increased again. Type=O2; PKW: 1HEX=0.1 ms PZD Gr.: –	0.8 to 4.0 [ms]	– 1.5	3 / ABR 3 / A
P325 145Hex	**MC switch-on del** Delay time for closing (energizing) the main contactor. By delaying energization of the main contactor, it is possible to charge the DC link up to the line voltage peak value via the precharging resistors. This measure will be necessary if the external DC-link capacitance connected to the AFE is significantly higher than that of the AFE. Type=O2; PKW: 1HEX=0.1 s PZD Gr.: –	0.0 to 30.0 [s]	– 0.0	3 / BR 3 / B
P326 146Hex	**Max.pre-chrg. t.** Maximum precharging time If the DC link is not successfully precharged within this period, fault message Precharging (F002) or, if the line voltage is too low, fault message Line Voltage (F004) is activated. RDS(2) parameter Type=O2; PKW: 1HEX=0.1 s PZD Gr.: 0	0.1 to 30.0 [s]	2 i001=3.0 i002=3.0	3 / BR 3 / B
P329 149Hex	**MCInvEnableDel** Delay between activation of the main contactor and enabling of the inverter. By increasing this time, it is possible to ensure that the DC link is charged up completely to the peak value of the mains voltage. This is necessary if the external DC link capacity connected to the AFE is considerably greater than that of the AFE. The set time should always be at least 100 ms greater than the time that the main contactor needs to close the contacts. Type=O2; PKW: 1HEX=0.o1 s PZD-Gr.: –	0.08 to 5.00 [s]	– 0.40	4 / BR 4 / BR

12.6 Functions

PNU *:conf-P	Parameter Name in OP1 Description	Range [Unit] Value Texts	# of Indices Factory Settings	read: _/_ write: _/_
P366 16EHex	**Auto Restart** Automatic restart (WEA) after power failure Parameter values: 0 = Inhibited 1 = Power failure acknowledgement only after power recovery 2 = AFE is restarted after power recovery CAUTION: External safety devices must be provided to ensure that the AFE does not start accidentally when P366 = 2! RDS(2) parameter Type=O2; PKW: 1HEX=1 PZD Gr.: -	0 to 2	2 i001=0 i002=0	3 / BR 3 / BR
P387 183Hex	**Vd minimum** Response threshold for shutdown DC-link undervoltage in closed-loop current control mode (P164 = 2). The line supply voltage is the reference quantity (P071). Type=O2; PKW: 1HEX=1 % PZD Gr.: –	5 to 140 [%]	– 100	3 / BR 3 / BR
P408 198Hex	**Forming time** DC link forming time This parameter defines the forming period for the DC link when P052=20. RDS parameter Type=O2; PKW: 1HEX=0.1 min PZD Gr.: 0	1.0 to 600.0 [min]	2 i001=10.0 i002=10.0	2 / ABR 2 / AB
P409 199Hex	**Line contac. del.** Delay time for commencement of precharging process. This parameter can be used to implement a time-graded sequence for starting up a number of drive units. Type=O2; PKW: 1HEX=0.1 s PZD Gr.: –	0.0 to 6.5 [s]	– 0.0	3 / BR 3 / B

12.7 Setpoint channel

PNU *:conf-P	Parameter Name in OP1 Description	Range [Unit] Value Texts	# of Indices Factory Settings	read: _/_ write: _/_
P443 * 1BBHex	**Src. Ud (set)** Source for the DC-link voltage setpoint. Parameter values: 1001: Fixed setpoint Other values: Acc. to process data connections of setpoint channel. B/R parameter Type=L2; PKW format(HEX)=param.value PZD Gr.: 0	0 to 4545	2 i001=1001 i002=1001	3 / BR 3 / BR
P444 1BCHex	**Vd (set) Kp** Gain for the DC-link voltage setpoint. B/R parameter Type=I2; PKW: 1HEX=0.1 % PZD: 4000HEX = 400 %	0.0 to 300.0 [%]	2 i001=100.0 i002=100.0	3 / BR 3 / BR
r447 1BFHex	**Vd (set,source)** Setpoint of DC-link voltage from setpoint nodes. The Vd setpoint is always limited to sensible values so as to prevent shutdown on faults as a result of impermissibly high setpoints. Minimum value: Peak value of line voltage = 1.42 x r030 Maximum value: 2x rated line voltage = 2 x P071 Analog output: 100 % with code number (PWE) = 4*P071 Type=O2; PKW: 1HEX=1 V PZD Gr.: 7	[V]	–	3 / BR
P486 * 1E6Hex	**Src.curr.setp.** Source for the setpoint of the active (line) current The parameterized active current setpoint is effective only in "Closed-loop current control" (P164 = 2) or "Slave AFE" modes (CW2, bit 27). Parameter values acc. to process data connections of setpoint channel. B/R parameter Type=L2; PKW format(HEX)=param. value PZD Gr.: 0	0 to 4545	2 i001=0 i002=0	3 / BR 3 / BR
P487 1E7Hex	**Curr.setp. Kp** Gain for the setpoint of the active (line) current in "Closed-loop current control" (P164 = 2) or "Slave AFE" modes (CW2, bit 27). B/R parameter Type=I2; PKW: 1HEX=0.1 % PZD: 4000HEX = 400 %	–300.0 to 300.0 [%]	2 i001=100.0 i002=100.0	3 / BR 3 / BR
r490 1EAHex	**Curr.setp.** Active (line) current setpoint in "Closed-loop current control" (P164 = 2) or "Slave AFE" modes (CW2, bit 27). Analog output: 100 % with code number (PWE) = 400 % Type=I2; PKW: 1HEX=0.1 % PZD: 4000HEX = 400 %	[A]	–	3 / BR

PNU *:conf-P	Parameter Name in OP1 Description	Range [Unit] Value Texts	# of Indices Factory Settings	read: _/_ write: _/_
P517 205Hex	**SetActValDev.Ud** Setpoint/actual value deviation in DC-link voltage Vd In the case of a large deviation between Vd setpoint and actual value, message "Setpoint actual value deviation" (status word 1, bits 8 (r552) is activated. Cf. P518 Minimum time of setpoint/actual value deviation Ref. quantity: Vd(set) (r126) RDS(2) parameter Type=O2; PKW: 1HEX=0.01 % PZD Gr.: 0	0.00 to 100.00 [%]	2 i001=2.00 i002=2.00	3 / BR 3 / B
P518 206Hex	**Deviation Time** Minimum time for setpoint/actual value deviation When there is a deviation between the setpoint/actual value (P517), the message "Setpoint/actual value deviation" (status word 1 bit 8 (r552)) is output when the time in P518 runs out. RDS(2) parameter Type=O2; PKW: 1HEX=0.01 s PZD Gr.: 0	0.0 to 10.00 [s]	2 i001=0.10 i002=0.10	3 / BR 3 / B

12.8 Control and status bit connections

PNU *:conf-P	Parameter Name in OP1 Description	Range [Unit] Value Texts	# of Indices Factory Settings	read: _/_ write: _/_
r550 226Hex	**Control Word 1** Display of control word 1, bits 0 to 15 (see Section "Control word"). Type=V2; PKW: 1HEX=1 PZD Gr.: 0		–	2 / BR
r551 227Hex	**Control Word 2** Display of control word 2, bits16 to 31 (see Section "Control word"). Type=V2; PKW: 1HEX=1 PZD Gr.: 0		–	2 / BR
r552 228Hex	**Status Word 1** Display of status word 1, bits 0 to 15 (see Section "Control word"). Type=V2; PKW: 1HEX=1 PZD Gr.: 0		–	2 / BR
r553 229Hex	**Status Word 2** Display of status word 2, bits 16 to 31 (see Section "Control word"). Type=V2; PKW: 1HEX=1 PZD Gr.: 0		–	2 / BR
P554 * 22AHex	**Src ON/OFF1** Source for ON/OFF1 command (control word 1, bit 0) See Section "Control word" for details Parameter values: 0: OFF1 1: Illegal setting 1001: Digital input 1 CUSA 1003: Digital input 3 CUSA 1010: ON/OFF keys PMU 2001: SST1, word 1,bit 0 Other values: See permissible settings in Section "Control word" (process data connections of control word) Note: A value of 4101 or 4201 is recommended in conjunction with the inputs of the serial IO system. B/R parameter Type=L2; PKW: PKW format(HEX)=param. value PZD Gr.: 0	0 to 5001	2 i001=1010 i002=1001	2 / BR 2 / BR
P555 * 22BHex	**Src1 OFF2(coast)** Source 1 of the OFF2 control command (control word 1, bit 1) See Section "Control word" for details Parameter values: 0: Illegal setting 1: Operating condition 1002: Digital input 2 CUSA Other values: See permissible settings in Section "Control word" (process data connections of control word) B/R parameter Type=L2; PKW: PKW format(HEX)=param. value PZD Gr.: 0	1 to 5001	2 i001=1 i002=1002	2 / BR 2 / BR
P556 * 22CHex	**Src2 OFF2 (coast)** Source 2 of the OFF2 control command (control word 1, bit 1) See P555 for description B/R parameter Type=L2; PKW: PKW format(HEX)=param. value PZD Gr.: 0	1 to 5001	2 i001=1 i002=1	2 / BR 2 / BR

PNU *:conf-P	Parameter Name in OP1 Description	Range [Unit] Value Texts	# of Indices Factory Settings	read: _/_ write: _/_
P557 * 22DHex	**Src3 OFF2 (coast)** Source 3 of the OFF2 control command (control word 1, bit 1) See P555 for description B/R parameter Type=L2; PKW: PKW format(HEX)=param.value PZD Gr.: 0	1 to 5001	2 i001=1 i002=1	2 / BR 2 / BR
P561 * 231Hex	**Src InvRelease** Source for the inverter enable command (control word 1, bit 3) See Section "Control word" for details Parameter values: 0: Disable inverter 1: Automatically when delay timers run down Other values: See permissible settings in Section "Control word" (process data connections of control word) B/R parameter Type=L2; PKW: PKW format(HEX)=param.value PZD Gr.: 0	0 to 5001	2 i001=1 i002=1	3 / BR 3 / BR
P565 * 235Hex	**Src1 Fault Reset** Source 1 of "Acknowledge" control command (control word 1, bit 7) See Section "Control word" for details Parameter values: 0: No source selected 1: Illegal setting 1003: Digital input 3 on CUSA Other values: See permissible settings in Section "Control word" (process data connections of control word) Note: The "Acknowledge" control command is edge-triggered. B/R parameter Type=L2; PKW: PKW format(HEX)=param.value PZD Gr.: 0	0 to 5001	2 i001=0 i002=1003	2 / BR 2 / BR
P566 * 236Hex	**Src2 Fault Reset** Source 2 of "Acknowledge" control command (control word 1, bit 7) See P565 for description B/R parameter Type=L2; PKW: PKW format(HEX)=param.value PZD Gr.: 0	0 to 5001	2 i001=0 i002=0	2 / BR 2 / BR
P567 * 237Hex	**Src3 Fault Reset** Source 3 of "Acknowledge" control command (control word 1, bit 7) See P565 for description B/R parameter Type=L2; PKW: PKW format(HEX)=param.value PZD Gr.: 0	0 to 5001	2 i001=2001 i002=2001	2 / BR 2 / BR
P568 * 238Hex	**Src Jog1 ON** Source for the Inching 1 setpoint (control word 1, bit 8) See Section "Control word" for details Parameter values: 0: No inching 1: Illegal setting 2001: SST1, word 1 bit 8 Other values: See permissible settings in Section "Control word" (process data connections of control word) B/R parameter Type=L2; PKW: PKW format(HEX)=param.value PZD Gr.: 0	0 to 5001	2 i001=0 i002=0	2 / BR 2 / BR

PNU *:conf-P	Parameter Name in OP1 Description	Range [Unit] Value Texts	# of Indices Factory Settings	read: _/_ write: _/_
P569 * 239Hex	**Src Jog2 ON** Source for the Inching 2 setpoint (control word 1, bit 8) See Section "Control word" for details Parameter values: 0: No inching 1: Illegal setting 2001: SST1, word 1, bit 8 Other values: See permissible settings in Section "Control word" (process data connections of control word) B/R parameter Type=L2; PKW format(HEX)=param.value PZD Gr.: 0	0 to 5001	2 i001=0 i002=0	2 / BR 2 / BR
P572 * 23CHex	**Src.regen.enable** Source for control command "Regenerative feedback enabled" (control word 1, bit 12) Parameter values: 0: Regenerative feedback disabled 1: Regenerative feedback enabled 2001: SST1, word 1, bit 8 Other values: See permissible settings in Section "Control word" (process data connections of control word) B/R parameter Type=L2; PKW format(HEX)=param.value PZD Gr.: 0	0 to 5001	2 i001=1 i002=1	2 / BR 2 / BR
P575 * 23FHex	**Src No Ext Fault1** Source for control command "External fault 1" (control word 1, bit 15) An L signal causes the drive to shut down on faults. Parameter values: 0: Illegal setting 1: No fault 1001: CUSA digital input 1 Other values: See permissible settings in Section "Control word" (process data connections of control word) B/R parameter Type=L2; PKW: PKW format(HEX)=param.value PZD Gr.: 0	1 to 5001	2 i001=1 i002=1	2 / BR 2 / BR
P576 * 240Hex	**Src. ext. 24V ok** Source for the bit for monitoring the external 24 V power supply. This bit is connected to digital input 4 on the CUSA at the factory. Parameter values: 0: Ext. 24V not o.k. 1: Ext. 24V o.k. 1001: CUSA digital input 1 Other values: See permissible settings in Section "Control word" (process data connections of control word) B/R parameter Type=L2;PKW format(HEX)=param.value PZD Gr.: 0	0 to 5001	2 i001=1004 i002=1004	3 / BR 3 / BR

PNU *:conf-P	Parameter Name in OP1 Description	Range [Unit] Value Texts	# of Indices Factory Settings	read: _/_ write: _/_
P578 * 242Hex	**Src. RDS bit 0** Source for bit 0 for selection of reserve data set (RDS) (control word 2, bit 18) Parameter values: 0: RDS bit 0 has a value of 0 1: RDS bit 0 has a value of 1 Other values: See permissible settings in Section "Control word" (process data connections of control word) Note: The reserve data set cannot be altered in Run mode. Any change to the bit setting will not take effect until the "Ready" state is reached. B/R parameter Type=L2; PKW: PKW format(HEX)=param. value PZD Gr.: 0	0 to 5001	2 i001=0 i002=0	3 / BR 3 / BR
P586 * 24AHex	**Src No ExtFault2** Source for control command "External fault 2" (control word 2, bit 26) An L signal causes the device to shut down on faults if: • the DC link has been precharged (operating state > 10) and • the 200 ms delay timer after precharging has run down Parameter values: 0: Illegal setting 1: No fault 1004: CUSA digital input 4 Other values: See permissible settings in Section "Control word" (process data connections of control word) B/R parameter Type=L2;PKW format(HEX)=param.value PZD Gr.: 0	1 to 5001	2 i001=1 i002=1	2 / BR 2 / BR
P587 * 24BHex	**Src.slave AFE** Source for "Master/slave AFE" switchover (control word 2, bit 27) Parameter values: 0: Master AFE (int. current setpoint) 1: Slave AFE (ext. current setpoint) 1002: CUSA digital input 2 Other values: See permissible settings in Section "Control word" (process data connections of control word) B/R parameter Type=L2; PKW: PKW format(HEX)=param.value PZD Gr.: 0	0 to 5001	2 i001=0 i002=0	3 / BR 3 / BR
P588 * 24CHex	**Src No Ext Warn1** Source for control command "External alarm 1" (control word 2, bit 28) Parameter values: 0: Illegal setting 1: No alarm 1002: CUSA digital input 2 Other values: See permissible settings in Section "Control word" (process data connections of control word) B/R parameter Type=L2; PKW: PKW format(HEX)=param.value PZD Gr.: 0	1 to 5001	2 i001=1 i002=1	3 / BR 3 / BR

PNU *:conf-P	Parameter Name in OP1 Description	Range [Unit] Value Texts	# of Indices Factory Settings	read: _/_ write: _/_
P589 * 24DHex	**Src No Ext Warn2** Source for control command "External alarm 2" (control word 2, bit 29) Parameter values: 0: Illegal setting 1: No alarm Other values: See permissible settings in Section "Control word" (process data connections of control word) B/R parameter Type=L2; PKW: PKW format(HEX)=param. value PZD Gr.: 0	1 to 5001	2 i001=1 i002=1	3 / BR 3 / BR
P590 * 24EHex	**Src Base/Reserve** Source for basic / reserve setting switchover command (control word 2, bit 30) Parameter values: 0: Basic setting 1: Reserve setting 1005: CUSA digital input 5 Other values: See permissible settings in Section "Control word" (process data connections of control word) Type=L2; PKW: PKW format(HEX)=param.value PZD Gr.: 0	0 to 5001	– 1005	3 / BR 3 / BR
P600 * 258Hex	**Dst Ready for ON** Destination of the status bit 'Ready for ON' (status word 1, bit 0) Power is ON, the drive can be switched on. Parameter values: Depending on the selected index, all settings specified in Section "Status word" (process data connections of status word) may be parameterized. Indices: i001: GG: Select a terminal on the basic unit i002: SCI: Select a terminal on SCI1/2 i003: TSY: Select a terminal on TSY Type=L2; PKW: PKW format(HEX)=param.value PZD Gr.: 0	0 to 5002	3 i001=0 i002=0 i003=0	3 / BR 3 / BR
P601 * 259Hex	**Dst Rdy for Oper** Destination of status bit "Ready to Run" (status word 1, bit 1) The DC link is charged, the pulses can be enabled. Parameter values, indices as for P600 Type=L2; PKW: PKW format(HEX)=param.value PZD Gr.: 0	0 to 5002	3 i001=0 i002=0 i003=0	3 / BR 3 / BR
P602 * 25AHex	**Dst Operation** Destination of status bit "Run" (status word 1, bit 2) The device is running. Parameter values, indices as for P600 Type=L2; PKW: PKW format(HEX)=param.value PZD Gr.: 0	0 to 5002	3 i001=0 i002=0 i003=0	2 / BR 2 / BR
P603 * 25BHex	**Dst Fault** Destination of status bit "Fault" (status word 1, bit 3) Note: The active status (bit has H level) is output via the terminal in inverted form (broken-wire proof). Parameter values, indices as for P600 Type=L2; PKW: PKW format(HEX)=param.value PZD Gr.: 0	0 to 5002	3 i001=0 i002=0 i003=0	2 / BR 2 / BR

PNU *:conf-P	Parameter Name in OP1 Description	Range [Unit] Value Texts	# of Indices Factory Settings	read: _/_ write: _/_
P604 * 25CHex	**Dst NO OFF2** Destination of the status bit 'No OFF2 command' (status word 1, bit 4) Parameter values, indices as for P600 Type=L2; PKW: PKW format(HEX)=param.value PZD Gr.: 0	0 to 5002	3 i001=0 i002=0 i003=0	3 / BR 3 / BR
P606 * 25EHex	**Dst ON blocked** Destination of the status bit "Starting lockout active" (status word 1, bit 6) Note: The active status (bit has H level) is output via the terminal in inverted form (broken-wire proof). Parameter values, indices as for P600 Type=L2; PKW: PKW format(HEX)=param.value PZD Gr.: 0	0 to 5002	3 i001=0 i002=0 i003=0	3 / BR 3 / BR
P607 * 25FHex	**Dst Warning** Destination of the status bit "Alarm" (status word 1, bit 7) Note: The active status (bit has H level) is output via the terminal in inverted form (broken-wire proof). Parameter values, indices as for P600 Type=L2; PKW: PKW format(HEX)=param.value PZD Gr.: 0	0 to 5002	3 i001=0 i002=0 i003=0	2 / BR 2 / BR
P608 * 260Hex	**Trg Bit Deviat.** Destination of the status bit "DC-link voltage setpoint = Actual DC-link voltage' (status word 1, bit 8) - cf. P517; see Section "Status word" for details Parameter values, indices as for P600 Type=L2; PKW: PKW format(HEX)=param.value PZD Gr.: 0	0 to 5002	3 i001=0 i002=0 i003=0	3 / BR 3 / BR
P611 * 263Hex	**Dst Low Voltage** Destination of the status bit "Low voltage' (status word 1, bit 11) Note: The active status (bit has H level) is output via the terminal in inverted form (broken-wire proof). Parameter values, indices as for P600 Type=L2; PKW: PKW format(HEX)=param.value PZD Gr.: 0	0 to 5002	3 i001=0 i002=0 i003=0	3 / BR 3 / BR
P612 * 264Hex	**Dst Contactor** Destination of the status bit "Energize main contactor' (status word 1, bit 12); H level: Energize contactor! CAUTION: For safety reasons, this status bit is always connected to digital output 2 on the CUSA board on the AFE. It is not possible or permissible to connect the bit in any other way as it protects the AFE against damage by preventing the main contactor from closing before the DC link has been charged. Type=L2; PKW: PKW format(HEX)=param.value PZD Gr.: 0	0 to 5002	3 i001=1002 i002=0 i003=0	3 / BR 3 / BR
P614 * 266Hex	**Dst.Gen.Mot.** Destination of the status bit "Generator/motor operation" (status word 1, bit 14) Meaning: L: Motor-mode operation (rectifier) H: Generator-mode operation (regen. feedback) Parameter values, indices as for P600 Type=L2; PKW: PKW format(HEX)=param.value PZD Gr.: 0	0 to 5002	3 i001=0 i002=0 i003=0	3 / BR 3 / BR

PNU *:conf-P	Parameter Name in OP1 Description	Range [Unit] Value Texts	# of Indices Factory Settings	read: _/_ write: _/_
P618 * 26AHex	**DstCurrLimAct.** Destination of the status bit "Current limit active' (status word 2, Bit 18) Note: The active status (bit has H level) is output via the terminal in inverted form (broken-wire proof). Parameter values, indices as for P600 Type=L2; PKW: PKW format(HEX)=param.value PZD Gr.: 0	0 to 5002	3 i001=0 i002=0 i003=0	3 / BR 3 / BR
P619 * 26BHex	**Dst Ext Fault 1** Destination of the status bit "External fault 1 active' (status word 2, bit 19) Note: The active status (bit has H level) is output via the terminal in inverted form (broken-wire proof). Parameter values, indices as for P600 Type=L2; PKW: PKW format(HEX)=param.value PZD Gr.: 0	0 to 5002	3 i001=0 i002=0 i003=0	3 / BR 3 / BR
P620 * 26CHex	**Dst Ext Fault 2** Destination of the status bit "External fault 2 active' (status word 2, bit 20) Notes: • The active status (bit has H level) is output via the terminal in inverted form (broken-wire proof). • The device accepts the fault after 200 ms provided that an ON command is active. Parameter values, indices as for P600 Type=L2; PKW: PKW format(HEX)=param.value PZD Gr.: 0	0 to 5002	3 i001=0 i002=0 i003=0	3 / BR 3 / BR
P621 * 26DHex	**Dst Ext Warning** Destination of the status bit "External alarm active' (status word 2, bit 21) Note: The active status (bit has H level) is output via the terminal in inverted form (broken-wire proof). Parameter values, indices as for P600 Type=L2; PKW: PKW format(HEX)=param.value PZD Gr.: 0	0 to 5002	3 i001=0 i002=0 i003=0	3 / BR 3 / BR
P622 * 26EHex	**Dst.warn.i2tAFE** Destination of the status bit "Inverter overload alarm" (status word 2, bit 22); cf. r010 (AFE utilization) Note: The active status (bit has H level) is output via the terminal in inverted form (broken-wire proof). Parameter values, indices as for P600 Type=L2; PKW: PKW format(HEX)=param.value PZD Gr.: -	0 to 5002	3 i001=0 i002=0 i003=0	3 / BR 3 / BR
P623 * 26FHex	**DstFltOvertmpAFE** Destination of the status bit "Inverter overtemperature fault" (status word 2, bit 23) Note: The active status (bit has H level) is output via the terminal in inverted form (broken-wire proof). Parameter values, indices as for P600 Type=L2; PKW: PKW format(HEX)=param.value PZD Gr.: 0	0 to 5002	3 i001=0 i002=0 i003=0	3 / BR 3 / BR

PNU *:conf-P	Parameter Name in OP1 Description	Range [Unit] Value Texts	# of Indices Factory Settings	read: _/_ write: _/_
P624 * 270Hex	**DstWarOvertmpAFE** Destination of the status bit "Inverter overtemperature alarm" (status word 2, bit 24) Note: The active status (bit has H level) is output via the terminal in inverted form (broken-wire proof). Parameter values, indices as for P600 Type=L2; PKW: PKW format(HEX)=param.value PZD Gr.: 0	0 to 5002	3 i001=0 i002=0 i003=0	3 / BR 3 / BR
P629 * 275Hex	**DstPrechrgContEn** Destination of the status bit “Precharging contactor energized” (status word 2, bit 29) Caution: For safety reasons, this status bit on the AFE is always connection to digital output 1 on the PEU. Type=L2; PKW: PKW format(HEX)=param.value PZD Gr.: 0	0 to 5002	3 i001=1001 i002=0 i003=0	3 / BR 3 / BR
P631 * 277Hex	**Dst Pre-Charging** Destination connection for the status bit "Precharging active" (status word 2, bit 31) Parameter values, indices as for P600 Type=L2; PKW: PKW format(HEX)=param.value PZD Gr.: 0	0 to 5002	3 i001=0 i002=0 i003=0	3 / BR 3 / BR

12.9 Analog inputs/outputs

PNU *:conf-P	Parameter Name in OP1 Description	Range [Unit] Value Texts	# of Indices Factory Settings	read: _/_ write: _/_
P655 * 28FHex	**CUA AnaOut ActVal** Actual value output via the analog output of the CUSA Setting instruction: Enter the number of the parameter whose value is to be displayed. Type=O2; PKW: 1HEX=1 PZD Gr.: 0	0 to 999	– 303	2 / BR 2 / BR
P656 290Hex	**CUSA AnalogOutGain** Gain factor of the analog output on the CUSA, see Section "Analog outputs" Parameter values: P656 = calculated output voltage when parameter value is set to 100 % The calculation formula for the output voltage is as follows: $V_{out} = \frac{PWE}{100\ \%} \cdot P656 + P657$ Note: The output voltage at the analog output can be maximum ± 10 V. Type=I2; PKW: 1HEX=0.01 V PZD Gr.: 0	–320.00 to 320.00 [V]	– 10.00	2 / BR 2 / BR
P657 291Hex	**CUSA AnalogOutOffs** Offset of the analog output on the CU, cf. P656 Type=I2; PKW: 1HEX=0.01 V PZD Gr.: 0	–100.00 to 100.00 [V]	– 0.00	2 / BR 2 / BR
P660 294Hex	**SCI AnalogInConf** Configuration of the analog inputs on the SCI1 boards, defining the type of input signals: Parameter values: Terminals X428/3, 6, 9 / Terminals X428/5, 8, 11 0: – 10 V ... + 10 V / –20 mA ... + 20 mA 1: 0 V ... + 10 V / 0 mA ... + 20 mA 2: 4 mA ... + 20 mA Notes: • Only one signal can be processed per input. A choice of voltage or current signals can be evaluated. • Voltage and current signals must be connected to different terminals. • Settings 1 and 2 allow only unipolar signals to be used, i.e. the internal process quantities are also unipolar. • When setting 2 is selected, an input current of < 2 mA causes a shutdown on faults (open-wire monitoring). • Offset adjustment of the analog inputs is parameterized via parameter P662. Indices: i001: SI11 Slave 1, analog input 1 i002: SI12 Slave 1, analog input 2 i003: SI13 Slave 1, analog input 3 i004: SI21 Slave 2, analog input 1 i005: SI22 Slave 2, analog input 2 i006: SI23 Slave 2, analog input 3 Precondition: The associated SCB board must be logged on via P090 or P091. Type=O2; PKW: 1HEX=1.0 PZD Gr.: -	0 to 2 –10 V...+10 V 0 V...+10 V 4 mA...20 mA	6 i001=0 i002=0 i003=0 i004=0 i005=0 i006=0	3 / BR 3 / BR

PNU *:conf-P	Parameter Name in OP1 Description	Range [Unit] Value Texts	# of Indices Factory Settings	read: _/_ write: _/_
P661 295Hex	**SCI AnaInSmooth** Smoothing time constant of analog inputs on SCI boards Formula: T=2 ms x 2^{P661} Indices: See P660 Type=O2; PKW: 1HEX=1.0 PZD Gr.: -	0 to 15	6 i001=2 i002=2 i003=2 i004=2 i005=2 i006=2	3 / BR 3 / BR
P662 296Hex	**SCI AnalogInOffs** Zero offset of analog inputs on SCI boards See SCI Operator's Guide for setting instructions Indices: See P660 Type=I2; PKW: 1HEX=0.01 V PZD: 4000HEX=160 V	–20.00 to 20.00 [V]	6 i001=0.00 i002=0.00 i003=0.00 i004=0.00 i005=0.00 i006=0.00	3 / BR 3 / BR
P664 * 298Hex	**SCI AnaOutActVal** Output of actual values via analog outputs on SCI boards Setting instruction: Enter the number of the parameter whose value is to be output. See SCI Operator's Guide for details. Indices: i001: SI11 Slave 1, analog output 1 i002: SI12 Slave 1, analog output 2 i003: SI13 Slave 1, analog output 3 i004: SI21 Slave 2, analog output 1 i005: SI22 Slave 2, analog output 2 i006: SI23 Slave 2, analog output 3 Precondition: The associated SCB board must be logged on via P090 or P091. Type=O2; PKW: 1HEX=1.0 PZD Gr.: 0	0 to 1999	6 i001=0 i002=0 i003=0 i004=0 i005=0 i006=0	3 / BR 3 / BR
P665 299Hex	**SCI AnaOut Gain** Gain for analog outputs via the SCI slaves Setting instruction: See SCI Operator's Guide Indices: See P664 Type=I2; PKW: 1HEX=0.01 PZD: 4000HEX=160	–320.00 to 320.00	6 i001=10.00 i002=10.00 i003=10.00 i004=10.00 i005=10.00 i006=10.00	3 / BR 3 / BR
P666 29AHex	**SCI AnaOut Offs** Offset of analog outputs on SCI boards Setting instruction: See SCI Operator's Guide Indices: See P664 Type=I2; PKW: 1HEX=0.01 V PZD: 4000HEX=160 V	–100.00 to 100.00 [V]	6 i001=0.00 i002=0.00 i003=0.00 i004=0.00 i005=0.00 i006=0.00	3 / BR 3 / BR

12.10 Interface configuration

PNU *:conf-P	Parameter Name in OP1 Description	Range [Unit] Value Texts	# of Indices Factory Settings	read: _/_ write: _/_
P680 * 2A8Hex	**SCom1 Act Value** Output of actual values via serial interface SST1 Defines which parameter must be transferred at which telegram position. Notes: • Status word 1 (r968) should be assigned to word 1. • In the case of double word parameters (type I4), the associated parameter number must be entered in two consecutive words or else only the most significant word will be transferred. • The length (number of words) of the process data section in the telegram is set via P685, index i001. Indices: i001 = W01: Word 01 of (process data section) of the telegram i002 = W02: Word 02 of (process data section) of the telegram ... i016 = W16: Word 16 of (process data section) of the telegram Type=O2; PKW: 1HEX=1.0 PZD Gr.: 0	0 to 999	16 i001=968 i002=0 i003=0 i004=0 i005=0 i006=0 i007=0 i008=0 i009=0 i010=0 i011=0 i012=0 i013=0 i014=0 i015=0 i016=0	3 / BR 3 / BR
P682 2AAHex	**SCB Protocol** The SCB board can be operated as a • master for the SCI boards or as a • communications board (see SCB Operator's Guide). Parameter values: 0 = Master for SCI boards 1 = 4-wire USS 2 = 2-wire USS 3 = Peer to Peer 4 = Not assigned 5 = Not assigned Precondition: The associated SCB board must be logged on via P090 or P091 Type=O2; PKW: 1HEX=1.0 PZD Gr.: -	0 to 5 SCI module 4-wire USS 2-wire USS Peer-2-Peer Option 1 Option 2	– 0	3 / H BR 3 / H
P683 * 2ABHex	**SCom/SCB BusAddr** Bus address of serial interfaces (see Section "Serial interfaces") Indices: i001 = SST1: Bus address of serial interface 1 (CUSA) i002 = SCB: Bus address of SCB if P682 = 1, 2 Type=O2; PKW: 1HEX=1.0 PZD Gr.: -	0 to 31	2 i001=0 i002=0	3 / BR 3 / BR
P684 * 2ACHex	**SCom/SCB Baud** Baud rate of serial interfaces Parameter values: 1: 300 baud 8: 38400 baud 2: 600 baud 9: 57600 baud 3: 1200 baud 10: 76800 baud 4: 2400 baud 11: 93750 baud 5: 4800 baud 12: 115200 baud 6: 9600 baud 13: 187500 baud 7: 19200 baud Indices: i001 = SST1: Baud rate of ser. interface 1 (CUSA) i002 = SCB: Baud rate of SCB if P682 = 1, 2, 3 Type=O2; PKW: 1HEX=1.0 PZD Gr.: -	1 to 13	2 i001=6 i002=6	3 / BR 3 / BR

PNU *:conf-P	Parameter Name in OP1 Description	Range [Unit] Value Texts	# of Indices Factory Settings	read: _/_ write: _/_
P685 * 2ADHex	**SCom/SCB PCV** Number of words (16-bit) in PKW section in the net data block of the telegram (see Section "Serial interfaces") Parameter values: 0: No PKW section 3, 4: PKW section is 3 (ident., ind,value), 4 words long 127: Variable PKW length for transmission of parameter description and texts. Indices: i001 = SST1: Serial interface 1 (CUSA) i002 = SCB: SCB if P682 = 1, 2 Type=O2; PKW: 1HEX=1.0 PZD Gr.: -	0 to 127	2 i001=127 i002=127	3 / BR 3 / BR
P686 * 2AEHex	**SCom/SCB # PrDat** Number of words (16-bit) of process data section in the net data block of the telegram (see Section "Serial interfaces"). Indices: i001 = SST1: Serial interface 1 (CUSA) i002 = SCB: SCB if P682 = 1, 2, 3 Type=O2; PKW: 1HEX=1.0 PZD Gr.: -	0 to 16	2 i001=2 i002=2	3 / BR 3 / BR
P687 * 2AFHex	**SCom/SCB TlgOFF** Telegram failure time for CUSA and SCB Shutdown on faults occurs if no correct telegram is received within the specified time. Setting instructions: • Value 0: No monitoring and no fault shutdown; parameterize for sporadic (acyclic) telegrams (e.g. OP on SST1). • If a TB is installed in slot 2 and an SCB in slot 3, then the setting in i002 is irrelevant. Indices: i001 = SST1: Serial interface 1 (CUSA) i002 = SCB: SCB Type=O2; PKW: 1HEX=1.0 ms PZD: 4000HEX=1638.4 ms	0 to 6500 [ms]	2 i001=0 i002=0	3 / BR 3 / BR
P689 2B1Hex	**SCB Peer2PeerExt** Direct transfer of peer-to-peer receive data of the SCB. Identification of words in received peer-to-peer telegram which must be transferred on directly. Param. values: 0: No immediate transfer (to CUSA only) 1: Direct transfer (incl. transfer to CUSA) Indices: i001 = W01: Word 01 of (process data section of telegram) i002 = W02: Word 02 of (process data section of telegram) ... i005 = W05: Word 05 of (process data section of telegram) Precondition: P682 = 3 (peer-to-peer protocol) Type=O2; PKW: 1HEX=1.0 PZD Gr.: -	0 to 1	5 i001=0 i002=0 i003=0 i004=0 i005=0	3 / BR 3 / BR

PNU *:conf-P	Parameter Name in OP1 Description	Range [Unit] Value Texts	# of Indices Factory Settings	read: _/_ write: _/_
P690 * 2B2Hex	**SCB Act Values** Output of actual values via the serial interface of the SCB board Defines which parameter must be transferred at which telegram position. Notes: • Status word 1 (r968) should be assigned to word 1. • In the case of double word parameters (type I4), the associated parameter number must be entered in two consecutive words or else only the most significant word will be transferred. • The length (number of words) of the process data section in the telegram is set via P685, index i002. Indices: i001 = W01: Word 01 of (process data section) of the telegram i002 = W02: Word 02 of (process data section) of the telegram ... i016 = W16: Word 16 of (process data section) of the telegram CAUTION: When P682 = 3 (peer-to-peer protocol), a maximum of 5 words can be transferred (i001 to i005). Type=O2; PKW: 1HEX=1.0 PZD Gr.: 0	0 to 999	16 i001=0 i002=0 i003=0 i004=0 i005=0 i006=0 i007=0 i008=0 i009=0 i010=0 i011=0 i012=0 i013=0 i014=0 i015=0 i016=0	3 / BR 3 / BR
P694 * 2B6Hex	**CB/TB Act Values** Output of actual values via CB or TB Defines which parameter must be transferred at which telegram position. Notes: • Status word 1 (r968) should be assigned to word 1. • In the case of double word parameters (type I4), the associated parameter number must be entered in two consecutive words or else only the most significant word will be transferred. Indices: i001= W01: Word 01 of (process data section) of the telegram i002= W02: Word 02 of (process data section) of the telegram ... i016= W16: Word 16 of (process data section) of the telegram Type=O2; PKW: 1HEX=1.0 PZD Gr.: 0	0 to 999	16 i001=968 i002=0 i003=0 i004=0 i005=0 i006=0 i007=0 i008=0 i009=0 i010=0 i011=0 i012=0 i013=0 i014=0 i015=0 i016=0	3 / BR 3 / BR
P695 * 2B7Hex	**CB/TB TlgOFFTime** Telegram failure time for CB and TB Shutdown on faults occurs if no correct telegram is received within the specified time. Setting instructions: Value 0: No monitoring and no fault shutdown; parameterize for sporadic (acyclic) telegrams. Type=O2; PKW: 1HEX=1.0 ms PZD: 4000HEX=1638.4 ms	0 to 6500 [ms]	– 10	3 / BR 3 / BR

PNU *:conf-P	Parameter Name in OP1 Description	Range [Unit] Value Texts	# of Indices Factory Settings	read: _/_ write: _/_
P696 2B8Hex	**CB Parameter 1** Communication Board parameter 1 Refer to documentation of installed COM BOARD Setting instructions: • This parameter is relevant only if a Communication Board is configured and parameterized (P090 or P091 = 1) • The validity of the setting is monitored by the board. • If the value is not accepted by the COM BOARD, fault 80 with fault value 5 is displayed. Type=O2; PKW: 1HEX=1.0 PZD Gr.: 0	0 to 65535	– 0	3 / H BR 3 / H
P697 2B9Hex	**CB Parameter 2** Communication Board parameter 2 See P696 Type=O2; PKW: 1HEX=1.0 PZD Gr.: 0	0 to 65535	– 0	3 / H BR 3 / H
P698 2BAHex	**CB Parameter 3** Communication Board parameter 3 See P696 Type=O2; PKW: 1HEX=1.0 PZD Gr.: 0	0 to 65535	– 0	3 / H BR 3 / H
P699 2BBHex	**CB Parameter 4** Communication Board parameter 4 See P696 Type=O2; PKW: 1HEX=1.0 PZD Gr.: 0	0 to 65535	– 0	3 / H BR 3 / H
P700 2BCHex	**CB Parameter 5** Communication Board parameter 5 See P696 Type=O2; PKW: 1HEX=1.0 PZD Gr.: 0	0 to 65535	– 0	3 / H BR 3 / H
P701 2BDHex	**CB Parameter 6** Communication Board parameter 6 See P696 Type=O2; PKW: 1HEX=1.0 PZD Gr.: 0	0 to 65535	– 0	3 / H BR 3 / H
P702 2BEHex	**CB Parameter 7** Communication Board parameter 7 See P696 Type=O2; PKW: 1HEX=1.0 PZD Gr.: 0	0 to 65535	– 0	3 / H BR 3 / H
P703 2BFHex	**CB Parameter 8** Communication Board parameter 8 See P696 Type=O2; PKW: 1HEX=1.0 PZD Gr.: 0	0 to 65535	– 0	3 / H BR 3 / H
P704 2C0Hex	**CB Parameter 9** Communication Board parameter 9 See P696 Type=O2; PKW: 1HEX=1.0 PZD Gr.: 0	0 to 65535	– 0	3 / H BR 3 / H
P705 2C1Hex	**CB Parameter 10** Communication Board parameter 10 See P696 Type=O2; PKW: 1HEX=1.0 PZD Gr.: 0	0 to 65535	– 0	3 / H BR 3 / H
P706 2C3Hex	**CB Parameter 11** Communication Board parameter 11 Indices: i001 - i005 See P696 Type=O2; PKW: 1HEX=1.0 PZD Gr.: 0	0 to 65535	5 i001=0 i002=0 i003=0 i004=0 i005=0	3 / H BR 3 / H

12.11 Diagnostic functions

PNU *:conf-P	Parameter Name in OP1 Description	Range [Unit] Value Texts	# of Indices Factory Settings	read: _/_ write: _/_
r720 2D0Hex	**SW Version** Software version of the PCBs in positions 1 to 3 of the electronics box Indices: i001: SPI1: Software version of board in slot 1 i002: SPI2: Software version of board in slot 2 i003: SPI3: Software version of board in slot 3 Note: The TSY board has no software version. The equivalent identifier is always 0.0. Type=O2; PKW: 1HEX=0.1 PZD Gr.: 0		3	3 /U BR
r721 2D1Hex	**SW Generat.Date** Date of creation of the CUSA software Indices: i001: Year: Year i002: Mon.: Month i003: Day: Day Type=O2; PKW: 1HEX=1.0 PZD Gr.: 0		3	3 /U BR
r722 2D2Hex	**SW ID** Expanded software version code of the PCBs in positions 1 to 3 of the electronics box Indices: i001: SPI1: Software code of board in slot 1 i002: SPI2: Software code of board in slot 2 i003: SPI3: Software code of board in slot 3 Note: The TSY board has no software code. The equivalent code is always 0.0. Type=O2; PKW: 1HEX=0.1 PZD Gr.: 0		3	3 /U BR
r723 2D3Hex	**PCB Code** Identification code of boards in slots 1, 2 and 3 of the electronics box. Indices: i001: SPI1: PCB code of board in slot 1 i002: SPI2: PCB code of board in slot 2 i003: SPI3: PCB code of board in slot 3 PCB codes: CU: 100 - 109 CB: 140 - 149 TB: 130 - 139 SCB: 120 - 129 TSY: 110 - 119 Type=O2; PKW: 1HEX=1.0 PZD Gr.: 0		3	3 /U BR

PNU *:conf-P	Parameter Name in OP1 Description	Range [Unit] Value Texts	# of Indices Factory Settings	read: _/_ write: _/_
r725 2D5Hex	**CalcTimeHeadroom** Available CPU computation time reserve on CUSA as % of total computing power. Relevant parameters are sampling time (P308) and pulse frequency (P761). Analog output: 100 % with code number (PWE) = 16384 % Type=O2; PKW: 1HEX=1.0 % PZD Gr.: 0	[%]	–	3 / BR
r730 2DAHex	**SCB Diagnosis** SCB diagnostic information All values displayed in hexadecimal notation Displayed numbers overflow at FF Hex. The meaning of individual indices depends of the selected SCB protocol (P682). Indices: i001: flTC Number of error-free telegrams i002: Terr Number of errored telegrams i003: Voff USS: Number of byte frame errors SCI boards: Number of slave power outages i004: Toff USS: Number of overrun errors SCI boards: Number of fiber optic link interrupts i005: PnoS USS: Parity error SCI boards: Number of missing response telegrams i006: STxL USS: STX error SCI boards: Number of search telegrams for slave acceptance i007: ETX ETX-error i008: BcCC USS: Block check error SCI boards: Number of configuration telegrams i009: L/KL USS/Peer to Peer: Incorrect telegram length SCI boards: Highest terminal numbers required acc. to PZD connection (P554 to P631) i010: T/An USS: Timeout SCI boards: Analog inputs/outputs required acc. to PZD connection of setpoint channel and actual value output via SCI (P664). i011: Res1 Reserved i012: Res2 Reserved i013: Warn SCB-DPR alarm word i014: SI1? Setting indicating whether slave 1 is needed and, if yes, of what type 0: No slave needed 1: SCI1 2: SCI2 i015: SI2? Setting indicating whether slave 2 is needed and, if yes, of what type 0: No slave needed 1: SCI1 2: SCI2 i016: IniF SCI boards: Initialization error Type=L2; PKW: 1HEX=1.0 PZD Gr.: 0		24	3 / H BR

PNU *:conf-P	Parameter Name in OP1 Description	Range [Unit] Value Texts	# of Indices Factory Settings	read: _/_ write: _/_
r731 2DBHex	**CB/TB Diagnosis** For detailed information please refer to the operating manuals of the relevant Com board (CB) or Tech board (TB). Type=L2; PKW: 1HEX=1.0 PZD Gr.: 0		32	3 / H BR
r748 2ECHex	**Trip Time** Times of fault events (reading of hours run counter (r013) at the time a fault occurred) Indices: Day Hours Seconds Latest fault (1) i001=S1-d i002=S1-h i003=S1-s Last acknowledged fault (2) i004=S2-d i005=S2-h i006=S2-s 2nd last acknowledged fault (3) i007=S3-d i008=S3-h i009=S3-s ... ... Oldest stored fault (8) i022=S8-d i023=S8-h i024=S8-s Description of faults in: r947 Fault number r949 Fault value r951 Fault number list P952 Number of faults Type=O2; PKW: 1HEX=1.0 PZD Gr.: 0		24	2 / BR

12.12 Gating unit

PNU *:conf-P	Parameter Name in OP1 Description	Range [Unit] Value Texts	# of Indices Factory Settings	read: _/_ write: _/_
r764 2FCHex	**Modulation Depth** Control factor of closed-loop control for gating unit. Analog output: 100 % with code number (PWE) = 400 % Type=O2; PKW: 1HEX=0.1 % PZD: 4000HEX=400 %	[%]	–	3 / BR

12.13 Factory parameters

PNU *:conf-P	Parameter Name in OP1 Description	Range [Unit] Value Texts	# of Indices Factory Settings	read: _/_ write: _/_
P789 315Hex	**RAM Access Value** Content of a memory location on the CUSA board Type=L2; PKW format(HEX)=param.value PZD Gr.: 0	0 to 65535	– 0	3 / BR 4 / BR
P799 * 31FHex	**Special Access** Parameter for special access Type=O2; PKW: 1HEX=1.0 PZD Gr.: 0	0 to 65535	– 0	3 / BR 3 / BR

12.14 Profile parameters

PNU *:conf-P	Parameter Name in OP1 Description	Range [Unit] Value Texts	# of Indices Factory Settings	read: _/_ write: _/_
P918 396Hex	**CB Bus Address** Protocol-dependent bus address for communication boards: see board documentation Note: The validity of the bus address is monitored by the Com Board. If its value is not accepted by COM BOARD, fault F080 with fault value 5 is displayed Precondition: P090 = 1 or P091 = 1 (Communication board logged on) Type=O2; PKW: 1HEX=1.0 PZD Gr.: -	0 to 200	– 3	3 / H BR 3 / H
P927 * 39FHex	**Parameter Access** Enabling of interfaces for parameterization See P053 for description. Type=O2; PKW: 1HEX=1.0 PZD Gr.: -	0 to 31	– 6	3 / BR 3 / BR
P928 * 3A0Hex	**Src Base/Reserve** Source for basic/reserve setting switchover command (control word 2, bit 30); this parameter is identical to P590. See P590 for description. Type=L2; PKW: PKW format(HEX)=param.value PZD Gr.: 0	0 to 5001	– 1005	3 / BR 3 / BR

PNU *:conf-P	Parameter Name in OP1 Description	Range [Unit] Value Texts	# of Indices Factory Settings	read: _/_ write: _/_
r947 3B3Hex	**Fault Memory** Display of faults which caused the last 8 fault events (r748); up to 8 faults can be stored for each event. Each fault has its own fault number (see list of faults, Section 7). For plain text information associated with fault numbers: See r951. Indices: Fault 1 Fault 2 ... Fault 8 Latest fault (1) i001=S1-1 i002=S1-2 ... i008=S1-8 Last acknowledged fault (2) i009=S2-1 i010=S2-2 ... i016=S2-8 2nd last acknowledged fault (3) i017=S3-1 i018=S3-2 ... i024=S3-8 ... Oldest fault stored (8) i057=S8-1 i058=S8-2 ... i064=S8-8 Notes: A value of "0" means "No fault". In the event of a power failure, only the current and last acknowledged fault are stored. Indices 17 to 64 are then reset to 0. See P952 for the number of stored fault events. Example of a fault: Last acknowledged fault (2) Index r947 r949 Index r748 9: 35, 0 — 4: 62 10: 37, 2 — 5: 1 11: 0, 0 — 6: 7 12 13 14 15 16 Fault time (r748): after 62 days, 1 hour, 7 sec operating hours Faults occurrences (r947): Fault value (r949): 35 No further details 37 2 Type=O2; PKW: 1HEX=1.0 PZD Gr.: 0		64	2 / BR
r949 3B5Hex	**Fault Value** Fault value of faults, facilitates troubleshooting for a variety of parameters. The fault values are stored in the same indices as the associated fault numbers (r947) - see example in r947. Type=O2; PKW: 1HEX=1.0 PZD Gr.: 0		64	3 / BR
r951 3B7Hex	**Fault Texts** List of fault texts; every fault text is stored under the same index as its fault number. Example (cf. r947): Fault 35 is stored in r947, i009. This is (r951, i035): 'Ext.fault1'. Type=O2; PKW: 1HEX=1.0 PZD Gr.: 0		116	2 / BR

PNU *:conf-P	Parameter Name in OP1 Description	Range [Unit] Value Texts	# of Indices Factory Settings	read: _/_ write: _/_
P952 * 3B8Hex	**# of Faults** Number of faults Contains the number of fault events stored in the fault memory (max. 8). If the parameter is set to "0", the entire contents of the diagnostic memory (r748 - fault time, r947 - fault number, r949 - fault value) are erased. Type=O2; PKW: 1HEX=1.0 PZD Gr.: -	0 to 8	– 0	2 / BR 2 / BR
r953 3B9Hex	**Warning Param1** Alarm parameter 1 If one of the alarms numbered from 1 to 16 occurs, the corresponding bar in the 7-segment display lights up. 16 15 14 13 12 11 10 9 8 7 6 5 4 3 2 1 Type=V2; PKW: 1HEX=1.0 PZD Gr.: 0		–	3 / BR
r954 3BAHex	**Warning Param2** Alarm parameter 2 If one of the alarms numbered from 17 to 32 occurs, the corresponding bar in the 7-segment display lights up. 32 31 30 29 28 27 26 25 24 23 22 21 20 19 18 17 Type=V2; PKW: 1HEX=1.0 PZD Gr.: 0		–	3 / BR
r955 3BBHex	**Warning Param3** Alarm parameter 3 If one of the alarms numbered from 33 to 48 occurs, the corresponding bar in the 7-segment display lights up. 48 47 46 45 44 43 42 41 40 39 38 37 36 35 34 33 Type=V2; PKW: 1HEX=1.0 PZD Gr.: 0		–	3 / BR
r956 3BCHex	**Warning Param4** Alarm parameter 4 If one of the alarms numbered from 49 to 64 occurs, the corresponding bar in the 7-segment display lights up. 64 63 62 61 60 59 58 57 56 55 54 53 52 51 50 49 Type=V2; PKW: 1HEX=1.0 PZD Gr.: 0		–	3 / BR
r957 3BDHex	**Warning Param5** Alarm parameter 5 If one of the alarms numbered from 65 to 80 occurs, the corresponding bar in the 7-segment display lights up. 80 79 78 77 76 75 74 73 72 71 70 69 68 67 66 65 Type=V2; PKW: 1HEX=1.0 PZD Gr.: 0		–	3 / BR

PNU *:conf-P	Parameter Name in OP1 Description	Range [Unit] Value Texts	# of Indices Factory Settings	read: _/_ write: _/_
r958 3BEHex	**Warning Param6** Alarm parameter 6 (CB alarms) If one of the alarms numbered from 81 to 96 occurs, the corresponding bar in the 7-segment display lights up. 96 95 94 93 92 91 90 89 88 87 86 85 84 83 82 81 Type=V2; PKW: 1HEX=1.0 PZD Gr.: 0		–	3 / BR
r959 3BFHex	**Warning Param7** Alarm parameter 6 (TB alarms 1) If one of the alarms numbered from 97 to 112 occurs, the corresponding bar in the 7-segment display lights up. 112 111 110 109 108 107 106 105 104 103 102 101 100 99 98 97 Type=V2; PKW: 1HEX=1.0 PZD Gr.: 0		–	3 / BR
r960 3C0Hex	**Warning Param8** Alarm parameter 6 (TB alarms 2) If one of the alarms numbered from 113 to 128 occurs, the corresponding bar in the 7-segment display lights up. 128 127 126 125 124 123 122 121 120 119 118 117 116 115 114 113 Type=V2; PKW: 1HEX=1.0 PZD Gr.: 0		–	3 / BR
r964 3C4Hex	**Drive ID** Drive identification Character string of the "Text" type. The first 2 characters contain the Ident number for drive identification on the Profibus. The remaining 24 characters contain the model name for displaying the drive model on visualization systems. Parameter values: 2 Byte: Ident number: 8022Hex 24 Byte: Model name (drive type): "MASTERDRIVES FC" Note: This parameter cannot be selected on the PMU; the value cannot be displayed on the OP. Type=VS; PKW: 1HEX=1.0 PZD Gr.: -		–	3 / BR
r965 3C5Hex	**Profile #** Profibus-specific parameter Note: This parameter cannot be selected on the PMU; the value cannot be displayed on the OP. Analog output: 100 % with code number (PWE) = 16384 Type=OS; PKW: 1HEX=1.0 PZD Gr.: 0		–	3 / BR
r967 3C7Hex	**Control Word 1** Visualization parameter for control word 1 (bits 0 - 15) Identical to r550 (control word 1) Type=V2; PKW: 1HEX=1.0 PZD Gr.: 0		–	2 / BR
r968 3C8Hex	**Status Word 1** Visualization parameter for status word 1 (bits 0 - 15) Identical to r552 (status word 1) Type=V2; PKW: 1HEX=1.0 PZD Gr.: 0		–	2 / BR

PNU *:conf-P	Parameter Name in OP1 Description	Range [Unit] Value Texts	# of Indices Factory Settings	read: _/_ write: _/_
P970 * 3CAHex	**Factory Settings** Parameter reset to factory settings Parameter values: 0: Parameter reset: All parameters are reset to their original values (factory settings). This parameter is then automatically reset to "1". 1: No parameter reset Note: The same function can be selected with P052 = 1. Type=O2; PKW: 1HEX=1.0 PZD Gr.: -	0 to 1	– 1	3 / B 3 / B
P971 * 3CBHex	**EEPROM Saving** Transfer to the EEPROM of parameter values stored in the RAM (to protect data when power is disconnected/fails) when the value of parameter changes from 0 to 1. The parameter must be set to 0 manually. Parameter values: 0: Change parameters 1: Save parameters Type=O2; PKW: 1HEX=1.0 PZD Gr.: -	0 to 1	– 0	3 / BR 3 / BR
r980 3D4Hex	**Par # List Pt1** List of available parameter numbers, part 1 The parameter numbers are listed in ascending sequence. The first 0 to appear in the list indicates that no further parameters are available. Indices: The value range of the index extends from 1 to 116. Index 116 has the special function of referring to the parameter number which contains the next part of the complete list. A value of 0 stored in index 116 indicates that there are no further parts of the complete list. Type=O2; PKW: 1HEX=1.0 PZD Gr.: 0		116	3 / BR
r981 3D5Hex	**Par # List Pt2** List of available parameter numbers, part 2 See r980. Type=O2; PKW: 1HEX=1.0 PZD Gr.: 0		116	3 / BR
r982 3D6Hex	**Par # List Pt3** List of available parameter numbers, part 3 See r980. Type=O2; PKW: 1HEX=1.0 PZD Gr.: 0		116	3 / BR
r983 3D7Hex	**Par # List Pt4** List of available parameter numbers, part 4 See r980. Type=O2; PKW: 1HEX=1.0 PZD Gr.: 0		116	3 / BR
r984 3D8Hex	**Par # List Pt5** List of available parameter numbers, part 5 See r980. Type=O2; PKW: 1HEX=1.0 PZD Gr.: 0		116	3 / BR
r985 3D9Hex	**Par # List Pt6** List of available parameter numbers, part 6 See r980. Type=O2; PKW: 1HEX=1.0 PZD Gr.: 0		116	3 / BR

PNU *:conf-P	Parameter Name in OP1 Description	Range [Unit] Value Texts	# of Indices Factory Settings	read: _/_ write: _/_
r986 3DAHex	**Par # List Pt7** List of available parameter numbers, part 7 See r980. Type=O2; PKW: 1HEX=1.0 PZD Gr.: 0		116	3 / BR
r987 3DBHex	**Par # List Pt8** List of available parameter numbers, part 8 See r980. Type=O2; PKW: 1HEX=1.0 PZD Gr.: 0		116	3 / BR
r988 3DCHex	**Par # List Pt9** List of available parameter numbers, part 9 See r980. Type=O2; PKW: 1HEX=1.0 PZD Gr.: 0		116	3 / BR
r989 3DDHex	**Par # List Pt10** List of available parameter numbers, part 10 See r980. Type=O2; PKW: 1HEX=1.0 PZD Gr.: 0		116	3 / BR
r990 3DEHex	**Par # List chg1** List of altered parameters, part 1 The parameter numbers are listed in ascending sequence. The first 0 to appear in the list indicates that no further parameters are available. Indices: The value range of the index extends from 1 to 116. Index 116 has the special function of referring to the parameter number which contains the next part of the complete list. A value of 0 stored in index 116 indicates that there are no further parts of the complete list. Type=O2; PKW: 1HEX=1.0 PZD Gr.: 0		116	3 / BR
r991 3DFHex	**Par # List chg2** List of altered parameters, part 2 See r990. Type=O2; PKW: 1HEX=1.0 PZD Gr.: 0		116	3 / BR
r992 3E0Hex	**Par # List chg3** List of altered parameters, part 3 See r990. Type=O2; PKW: 1HEX=1.0 PZD Gr.: 0		116	3 / BR

13 Control and Status Words

13.1 Control word

Operating states can be read in visualization parameter r001: e.g. READY FOR ON: r001 = 009

The functional sequences are described in the order in which they occur.

Introduction and example of application

An individual source can be parameterized for every control command (fixed values, digital inputs, PMU, PZD part of the telegram from the automation devices).

The selection parameters for the sources are, with the exception of P590 and P591, indexed 2x as follows:

Index i001: Basic setting (GRD)
Index i002: Reserve setting (RES)

One parameter is available to "connect up“ the source(s) for the control commands.

Example of source connection

The basic setting for the ON command (control word bit 0, control word 1) must be "connected up“ to digital input 1 of the CU (terminal -X101:16):

Control word 1 table shows that the factory setting of parameter P554.1 is 1010 for the basic setting of the ON command source.

Table A for the possible sources of the ON command specifies that 1010 is the "PMU operator control panel“ source.

Look for the parameter value for the required source in Tables X and A. The result for digital input 1 (BE1) on the CU can be found in Table X, it is 1001.

This parameter value must now be entered in parameter P554.1.

Command	Parameter	Possible sources	Parameter value	Required source connection
ON/OFF1 (GRD)	P554.1	Tab. X,A	1001	BE1 terminal -X101:16

A HIGH signal at terminal -X101:16 switches on the converter while a LOW signal switches it off.

NOTES

- Multiple connections are permitted!
- The control word commands "OFF2“ (bit 1), "OFF3“ (bit 2) and "Acknowledge“ (bit 7) are always simultaneously effective from 3 sources (can be parameterized)!
- "Acknowledge“ (bit 7) is always additionally effective from the PMU!
- If the "ON“ command (bit 0) is connected to a serial interface (SCom, CB/TB, SCB-SCom), then an "OFF2" or "OFF3" command must also be parameterized on the terminal strip. Otherwise, the converter cannot be switched off via a defined command in the event of a communications failure!

13.1.1 Display of control word on PMU seven-segment display

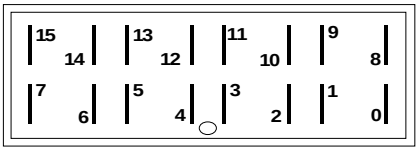

Control word 1

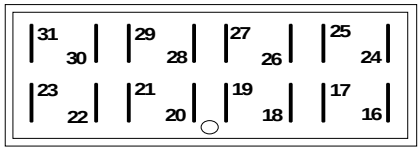

Control word 2

13.1.2 Control word 1 (visualization parameter r550 or r967)

The factory setting applies only when P077 = 0.

Designation Bit No. (meaning)	High / Low values (1 = High, 0 = Low)		Parameter No. GRD (RES)	Fact. setting GRD (RES) (P077 = 0)	Possible sources see 8.1.4
ON / OFF1 (stop)	ON	OFF1			
0	1	0	P554.1 (2)	1010 (1001)	Tab. X,A
OFF2 (electrical)	ON	OFF2			
1	1	0	& P555.1 (2)	0001 (1002)	Tab. X,B
			P556.1 (2)	0001 (0001)	Tab. X,B
			P557.1 (2)	0001 (0001)	Tab. X,B
2	Reserved				
Inverter enable	Enabled	Inhibited			
3	1	0	P561.1 (2)	0001 (0001)	Tab. X,F
4	Reserved				
5	Reserved				
6	Reserved				
Acknowledge	ON				
7	0 → 1		P565.1 (2)	0000 (1003)	Tab. X,C
			P566.1 (2)	0000 (0000)	Tab. X,C
			P567.1 (2)	2001 (2001)	Tab. X,C
				1010 (fixed)	
Inching 1 1)	Inching 1 ON	Inching 1 OFF			
8	1	0	P568.1 (2)	0000 (0000)	Tab. X,C
Inching 2 1)	Inching 2 ON	Inching 2 OFF			
9	1	0	P569.1 (2)	0000 (0000)	Tab. X,C
PZD control by PLC	Control	No control			
10	1	0	≥1 SCom1/2		
			CB / TB		
			SCB 2		
11	Reserved				
12	Reserved				
13	Reserved				
14	Reserved				
External fault 1	No fault	External fault 1			
15	1	0	P575.1 (2)	0001 (0001)	Tab. X,D

1) There is no inching setpoint 1 or inching setpoint 2 on the AFE

13.1.3 Control word 2 (visualization parameter r551)

The factory setting applies only when P077 = 0.

Designation Bit No. (meaning)	High / Low values (1 = High, 0 = Low)		Parameter No. GRD (RES)	Fact. setting GRD (RES) (P077 = 0)	Possible sources see 8.1.4
Ext. 24 V	Ext. 24 V ok	Ext. 24 V not ok			
16 3)	1	0	P576.1 (2)	1004 (1004)	Tab. X,I
17	Reserved				
Reserve data set	RDS 2	RDS 1			
18 4)	1	0	P578.1 (2)	0000 (0000)	Tab. X,I
19	Reserved				
20	Reserved				
21	Reserved				
22	Reserved				
23	Reserved				
24	Reserved				
25	Reserved				
External fault 2	No fault	External fault 2			
26	1	0	P586.1 (2)	0001 (0001)	Tab. X,G
Slave AFE	Slave AFE	Master AFE			
27	1	0	P587.1 (2)	0000 (0000)	Tab. X,I
External alarm 1	No alarm	External alarm 1			
28	1	0	P588.1 (2)	0001 (0001)	Tab. X,G
External alarm 2	No alarm	External alarm 2			
29	1	0	P589.1 (2)	0001 (0001)	Tab. X,G
Basic / reserve	Reserve setting	Basic setting			
30	1	0	P590	1005	Tab. X,I
31 5)	Reserved				

3) On MASTERDRIVES CUVC, this bit corresponds to bit 0 for the data set of the setpoint channel

4) On MASTERDRIVES CUVC, this bit corresponds to bit 0 for the data set of the motor

5) The AFE always uses a main contactor without check-back

13.1.4 Sources for control words 1 and 2

Table X (external terminals)

1001	BE1 terminal -X101:16
1002	BE2 terminal -X101:17
1003	BE3 terminal -X101:18
1004	Assigned
1005	BE5 terminal -X101:20
4101	SCI, slave1, terminal 01
4102	SCI, slave1, terminal 02
4103	SCI, slave1, terminal 03
4104	SCI, slave1, terminal 04
4105	SCI, slave1, terminal 05
4106	SCI, slave1, terminal 06
4107	SCI, slave1, terminal 07
4108	SCI, slave1, terminal 08
4109	SCI, slave1, terminal 09
4110	SCI, slave1, terminal 10
4111	SCI, slave1, terminal 11
4112	SCI, slave1, terminal 12
4113	SCI, slave1, terminal 13
4114	SCI, slave1, terminal 14
4115	SCI, slave1, terminal 15
4116	SCI, slave1, terminal 16
4201	SCI, slave2, terminal 01
4202	SCI, slave2, terminal 02
4203	SCI, slave2, terminal 03
4204	SCI, slave2, terminal 04
4205	SCI, slave2, terminal 05
4206	SCI, slave2, terminal 06
4207	SCI, slave2, terminal 07
4208	SCI, slave2, terminal 08
4209	SCI, slave2, terminal 09
4210	SCI, slave2, terminal 10
4211	SCI, slave2, terminal 11
4212	SCI, slave2, terminal 12
4213	SCI, slave2, terminal 13
4214	SCI, slave2, terminal 14
4215	SCI, slave2, terminal 15
4216	SCI, slave2, terminal 16
5001	TSY, terminal 1

Table A

0000	Constant value 0
1010	PMU operator panel
2001	SCom1 word 1
3001	CB/TB word 1
4501	SCB1/2 peer-to-peer, SCB2 USS, word 1
4502	SCB1/2 peer-to-peer, word 2
4503	SCB1/2 peer-to-peer, word 3
4504	SCB1/2 peer-to-peer, word 4
4505	SCB1/2 peer-to-peer, word 5

Table B

0001	Constant value 1
1010	PMU operator panel
2001	SCom1 word 1
3001	CB/TB word 1
4501	SCB1/2 peer-to-peer, SCB2 USS, word 1
4502	SCB1/2 peer-to-peer, word 2
4503	SCB1/2 peer-to-peer, word 3
4504	SCB1/2 peer-to-peer, word 4
4505	SCB1/2 peer-to-peer, word 5

Table C

0000	Constant value 0
2001	SCom1 word 1
3001	CB/TB word 1
4501	SCB1/2 peer-to-peer, SCB2 USS, word 1
4502	SCB1/2 peer-to-peer, word 2
4503	SCB1/2 peer-to-peer, word 3
4504	SCB1/2 peer-to-peer, word 4
4505	SCB1/2 peer-to-peer, word 5

Table D

0001	Constant value 1
2001	SCom1 word 1
3001	CB/TB word 1
4501	SCB1/2 peer-to-peer, SCB2 USS, word 1
4502	SCB1/2 peer-to-peer, word 2
4503	SCB1/2 peer-to-peer, word 3
4504	SCB1/2 peer-to-peer, word 4
4505	SCB1/2 peer-to-peer, word 5

Table E

0000	Constant value 0
0001	Constant value 1
1010	PMU operator panel
2001	SCom1 word 1
3001	CB/TB word 1
4501	SCB1/2 peer-to-peer, SCB2 USS, word 1
4502	SCB1/2 peer-to-peer, word 2
4503	SCB1/2 peer-to-peer, word 3
4504	SCB1/2 peer-to-peer, word 4
4505	SCB1/2 peer-to-peer, word 5

Table F

0000	Constant value 0
0001	Constant value 1
2001	SCom1 word 1
3001	CB/TB word 1
4501	SCB1/2 peer-to-peer, SCB2 USS, word 1
4502	SCB1/2 peer-to-peer, word 2
4503	SCB1/2 peer-to-peer, word 3
4504	SCB1/2 peer-to-peer, word 4
4505	SCB1/2 peer-to-peer, word 5

Table G

0001	Constant value 1
2004	SCom1 word 4
3004	CB/TB word 4
4501	SCB1/2 peer-to-peer, word 1
4502	SCB1/2 peer-to-peer, word 2
4503	SCB1/2 peer-to-peer, word 3
4504	SCB1/2 peer-to-peer, SCB2 USS, word 4
4505	SCB1/2 peer-to-peer, word 5

Table H

0001	No MC checkback
4501	SCB1/2 peer-to-peer, word 1
4502	SCB1/2 peer-to-peer, word 2
4503	SCB1/2 peer-to-peer, word 3
4504	SCB1/2 peer-to-peer, word 4
4505	SCB1/2 peer-to-peer, word 5

Table I

0000	Constant value 0
0001	Constant value 1
2004	SCom1 word 4
3004	CB/TB word 4
4501	SCB1/2 peer-to-peer, word 1
4502	SCB1/2 peer-to-peer, word 2
4503	SCB1/2 peer-to-peer, word 3
4504	SCB1/2 peer-to-peer, SCB2 USS, word 4
4505	SCB1/2 peer-to-peer, word 5

13.1.5 Description of the control word bits

Bit 0: ON / OFF1 command (↑ "ON") / (L "OFF1")

Condition Positive edge change from L to H (L → H) in READY FOR ON (009) state.

Result
- PRECHARGING (010)
  The precharging contactor is closed.
  The DC link is precharged, the main contactor then closed and the precharging contactor opened.
- READY TO RUN (011)
- RUN (014).

Bit 1: OFF2 command (L "OFF2") (electrical)

Condition LOW signal

Result
- The inverter pulses are inhibited and the main contactor opened.
- STARTING LOCKOUT (008) until the command is withdrawn.

NOTE The **OFF2** command is simultaneously effective from three sources (P555, P556 and P557)!

Bit 2: Reserved

Bit 3: Inverter enable command (H "Inverter enable") / (L "Inverter inhibit")

Condition HIGH signal and READY TO RUN (011)

Result
- RUN (014)
  The inverter pulses are enabled.

Condition LOW signal

Result
- In RUN (014):
  Change to READY TO RUN (011) display, inverter pulses are inhibited.

Bit 4: Reserved

Bit 5: Reserved

Bit 6: Reserved

Bit 7: Acknowledge command (↑ "Acknowledge")

Condition Positive edge change from L to H (L → H) in FAULT (007) state.

Result
- Reset all current faults after they have been transferred to the diagnostics memory.
- STARTING LOCKOUT (008) if no further faults are active.
- FAULT (007) if other faults are still active.

NOTE The **acknowledge** command is simultaneously effective from three sources (P565, P566 and P567) and always from the PMU!

Bit 8: Inching 1 ON command (↑ "Inching 1 ON") / (L "Inching 1 OFF")

Condition Positive edge change from L to H (L → H) in the READY FOR ON state (009).

Result
- An ON command is automatically issued (refer to control word bit 0).

Condition LOW signal

Result
- An OFF1 command is automatically issued (refer to control word bit 0).

Bit 9: Inching 2 ON command (↑ "Inching 2 ON") / (L "Inching 2 OFF")

Condition Positive edge change from L to H (L → H) in the READY FOR ON state (009).

Result
- An ON command is automatically issued (refer to control word bit 0).

Condition LOW signal

Result
- An OFF1 command is automatically issued (refer to control word bit 0).

Bit 10: Control via PLC command (H "Control via PLC")

Condition HIGH signal; The process data PZD (control word, setpoints) sent via the SCom1 interface of the CU, the CB/TB interface (option) and the SCom/SCB interface (option) are evaluated only in the case of an accepted command.

Result
- When several interfaces are in operation, only the process data of the interfaces sending an H signal are evaluated.
- With an L signal, the last values remain in the appropriate dual-port RAM of the interface.

NOTE An H signal is displayed in visualization parameter r550 "Control word 1" if **one** of the interfaces sends an H signal!

Bit 11: Reserved

Bit 12: Regenerative feedback enable command (H "Regenerative feedback enable")

Condition HIGH signal

Result
- Regenerative feedback operation is enabled.

Bit 13: Reserved

Bit 14: Reserved

Bit 15: External fault 1 command (L "External fault 1")

Condition LOW signal

Result
- FAULT (007) and fault message (F035).
  The inverter pulses are inhibited and the main contactor opened.

See Section "Fault and alarm messages"

Bit 16: Monitoring of external 24 V voltage supply (L "24V not o.k." / H "24V o.k.")

Condition LOW signal

Result
- Alarm A039 in operating states STARTING LOCKOUT (008) and READY FOR ON (009).
- Fault F007 in operating states PRECHARGING (010), READY TO RUN (011) and RUN (014).

Bit 17: Reserved

Bit 18: Reserve data set RDS bit 0 command (L "RDS1" / H "RDS2")

Condition READY FOR ON (009), PRECHARGING (010) or READY TO RUN (011)
A HIGH signal activates RDS2, and a LOW signal RDS1.

Result
- The parameter settings of the appropriate reserve data set in the setpoint channel and closed-loop/open-loop control are activated.

See Section "Function diagrams".

Bit 19: Reserved

Bit 20: Reserved

Bit 21: Reserved

Bit 22: Reserved

Bit 23: Reserved

Bit 24: Reserved

Bit 25: Reserved

Bit 26: External fault 2 command (L "External fault 2")

Condition LOW signal; Command is not activated until converter switches to READY TO RUN (011) and elapse of a 200 ms timer.

Result

- FAULT (007) and fault message (F036).
  The inverter pulses are inhibited and the main contactor (if installed) opened.

See Section "Fault and alarm messages".

Bit 27: Slave/master drive command (H "Slave AFE") / (L "Master drive")

Slave AFE

- The closed-loop control operates with an external line active current setpoint.
  The DC link voltage is specified by the master AFE.

Master AFE

- The closed-loop control operates with an internal line active current setpoint (= output of DC link voltage controller). The DC link voltage is maintained constantly at the set value.

Bit 28: External alarm 1 command (L "External alarm 1")

Condition LOW signal

Result

- The converter continues to operate in its current status. An alarm message (A015) is output.

See Section "Fault and alarm messages".

Bit 29: External alarm 2 command (L "External alarm 2")

Condition LOW signal

Result

- The converter continues to operate in its current status. An alarm message (A016) is output.

See Section "Fault and alarm messages".

Bit 30: Select reserve/basic setting (H "Reserve setting") / (L "Basic setting")

Condition	HIGH signal
Result	♦ The parameter values for the reserve setting for the control word itself, the setpoint channel and closed-loop control are activated.
Condition	LOW signal
Result	♦ The parameter values for the basic setting for the control word itself, the setpoint channel and closed-loop control are activated.

Bit 31: Reserved

13.2 Status word

Introduction and example of application

Status words are process data as defined by the explanation in Section "Process data".
A "destination" at which the bit status can be identified (digital outputs of CUSA, SCI 1/2 terminals, TSY terminals) can be parameterized for each bit in a status word.
One parameter is available for "wiring up" the destination for each status bit.
As shown below, the selection parameters have three indices:

Index i001 Selection of a terminal on the CUSA / PEU board (basic unit)

Index i002 Selection of a terminal on the SCI 1/2 board (option)

Index i003 Selection of a terminal on the TSY board (option)

Example of wiring to a destination

The message "motor operation" (status word 1, bit 14) must be "wired up" to digital output 3 (BA3) on the CUSA (terminal X102:29/33) as a high-active signal:

- "Wiring" of a status bit to a digital output on the CUSA is parameterized via index i001.
- The table for status word 1 indicates that the message "Motor operation" is assigned to parameter P614.
- Look for the parameter value for the desired destination in the same table. The result is 1003 for digital output 3 on the CU.

This parameter value must now be set in parameter P614.1.

Bit #	Meaning	Parameter	Parameter value	Desired destination connection
Bit 14	Motor operation	P614.1	1003	BA3 terminal -X102:29/33

When a High signal is applied to terminal -X102:29/33, the AFE operates in generator mode and, in the case of a Low signal, in motor mode.
If a value assigned to a terminal (digital output BA) is allocated to a destination once in a selection parameter, then it will not be available in the same index of any other selection parameter as a terminal is only suitable for the output of one status bit.

NOTE

Faults, alarms and **starting lockout (HIGH active)** are displayed as **LOW active** via the terminal strip (digital outputs).
This also applies to any option boards!

See Section "Digital outputs".

13.2.1 Status word 1 (visualization parameter r552 or r968)

PMU display

"Status word 1"

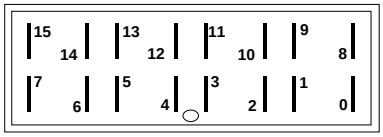

Bit #	Value	1 = High 0 = Low	Select destin.
Bit 0	1	Ready for ON	P600.x
	0	Not ready for ON	
Bit 1	1	Ready to RUN	P601.x
	0	Not ready to RUN	
Bit 2	1	Run	P602.x
	0	Inv. pulses inhibited	
Bit 3	1	Fault	P603.x
	0	No fault	
Bit 4	1	No OFF2	P604.x
	0	OFF2	
Bit 5		Reserved	
Bit 6	1	Starting lockout	P606.x
	0	No starting lockout	
Bit 7	1	Alarm	P607.x
	0	No alarm	
Bit 8	1	No setp./act.v. deviation	P608.x
	0	Setp./act. val. deviation	
Bit 9	1	PZD control requested	always 1
	0	(not permitted)	
Bit 10		Reserved	
Bit 11	1	"Undervoltage" fault	P611.x
	0	No "Undervolts." fault	
Bit 12	1	MC energized	P612.x
	0	MC not energized	
Bit 13		Reserved	
Bit 14 [1]	1	Generator operation	P614.x
	0	Motor operation	
Bit 15		Reserved	

	Value	Destination
x = 1	0000	No destination
	1001	Assigned (precharging)
	1002	Assigned (main contactor)
	1003	BA3, -X102:29/33
	1004	BA4, -X102:32/33
x = 2	0000	No destination
	4101	SCI 1/2, slave 1, BA1
	4102	SCI 1/2, slave 1, BA2
	4103	SCI 1/2, slave 1, BA3
	4104	SCI 1/2, slave 1, BA4
	4105	SCI 1/2, slave 1, BA5
	4106	SCI 1/2, slave 1, BA6
	4107	SCI 1/2, slave 1, BA7
	4108	SCI 1/2, slave 1, BA8
	4109	SCI 2 only, slave 1, BA9
	4110	SCI 2 only, slave 1, BA10
	4111	SCI 2 only, slave 1, BA11
	4112	SCI 2 only, slave 1, BA12
	4201	SCI 1/2, slave 2, BA1
	4202	SCI 1/2, slave 2, BA2
	4203	SCI 1/2, slave 2, BA3
	4204	SCI 1/2, slave 2, BA4
	4205	SCI 1/2, slave 2, BA5
	4206	SCI 1/2, slave 2, BA6
	4207	SCI 1/2, slave 2, BA7
	4208	SCI 1/2, slave 2, BA8
	4209	SCI 2 only, slave 2, BA9
	4210	SCI 2 only, slave 2, BA10
	4211	SCI 2 only, slave 2, BA11
	4212	SCI 2 only, slave 2, BA12
x = 3	0000	No destination
	5001	TSY, BA1
	5002	TSY, BA2

[1] This bit corresponds to bit "CW/CCW rotation" on the MASTERDRIVES CUVC

13.2.2 Status word 2 (visualization parameter r553)

PMU display

"Status word 2"

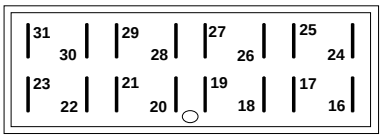

Bit #	Value	1 = High 0 = Low	Select destin.
Bit 16		Reserved	
Bit 17		Reserved	
Bit 18 [2]	1	Current limit active	P618.x
	0	Current limit not active	
Bit 19	1	External fault 1	P619.x
	0	No external fault 1	
Bit 20	1	External fault 2	P620.x
	0	No external fault 2	
Bit 21	1	External alarm	P621.x
	0	No external alarm	
Bit 22	1	AFE i2t alarm	P622.x
	0	No AFE i2t alarm	
Bit 23	1	AFE overtemp. fault	P623.x
	0	No AFE overtemp. fault	
Bit 24	1	AFE overtemp. alarm	P624.x
	0	No AFE overtemp. alarm	
Bit 25		Reserved	
Bit 26		Reserved	
Bit 27		Reserved	
Bit 28		Reserved	
Bit 29 [3]	1	PC contactor energized	P629.x
	0	PC cntact. not energized	
Bit 30		Reserved	
Bit 31	1	Precharging active	P631.x
	0	Precharging not active	

	Value	Destination
x = 1	0000	No destination
	1001	Assigned
	1002	Assigned
	1003	BA3, -X102:29/33
	1004	BA4, -X102:32/33
x = 2	0000	No destination
	4101	SCI 1/2, slave 1, BA1
	4102	SCI 1/2, slave 1, BA2
	4103	SCI 1/2, slave 1, BA3
	4104	SCI 1/2, slave 1, BA4
	4105	SCI 1/2, slave 1, BA5
	4106	SCI 1/2, slave 1, BA6
	4107	SCI 1/2, slave 1, BA7
	4108	SCI 1/2, slave 1, BA8
	4109	SCI 2 only, slave 1, BA9
	4110	SCI 2 only, slave 1, BA10
	4111	SCI 2 only, slave 1, BA11
	4112	SCI 2 only, slave 1, BA12
	4201	SCI 1/2, slave 2, BA1
	4202	SCI 1/2, slave 2, BA2
	4203	SCI 1/2, slave 2, BA3
	4204	SCI 1/2, slave 2, BA4
	4205	SCI 1/2, slave 2, BA5
	4206	SCI 1/2, slave 2, BA6
	4207	SCI 1/2, Slave 2, BA7
	4208	SCI 1/2, Slave 2, BA8
	4209	SCI 2 only, Slave 2, BA9
	4210	SCI 2 only, Slave 2, BA10
	4211	SCI 2 only, Slave 2, BA11
	4212	SCI 2 only, Slave 2, BA12
x = 3	0000	No destination
	5001	TSY, BA1
	5002	TSY, BA2

2) This bit corresponds to "Overspeed" bit on the MASTERDRIVES CUVC
3) This bit corresponds to "Bypassing contactor energized" bit on the MASTERDRIVES CUVC

13.2.3 Description of the status word bits

Bit 0: "Ready for ON" signal (H)

HIGH signal STARTING LOCKOUT (008) or READY FOR ON (009) state

Meaning
- The power supply, open-loop control and closed-loop control are all operative.
- The inverter pulses are inhibited.

Bit 1: "Ready to Run" signal (H)

HIGH signal PRECHARGING (010) or READY TO RUN (011) state

Meaning
- The power supply, open-loop control and closed-loop control are all operative.
- The converter is switched on.
- Precharging has been completed.
- The AFE inverter pulses are disabled and Ud control is disabled.

Bit 2: "Run" signal (H)

HIGH signal RUN state (014)

Meaning
- The converter is in operation.
- The AFE inverter pulses are enabled.
- Ud control is in operation.

Bit 3: "Fault" signal (H)

HIGH signal FAULT state (007)

Meaning
- A fault (fault type irrelevant) has occurred.

Output at terminal strip (CUSA, TSY, SCI1/2) with L signal.

Bit 4: "OFF2" signal (L)

LOW signal OFF2 command is active

Meaning
- An OFF2 command (control word bit 1) has been issued.

Bit 5: Reserved

Bit 6: "Starting lockout" signal (H)

HIGH signal STARTING LOCKOUT state (008)

Meaning
- The power supply, open-loop control and closed-loop control are all operative.
- The signal is continuously applied as long as an OFF2 command via control word bit 1 or an ON command via control word bit 0 is active (edge evaluation).

Output at terminal strip (CUSA, SCB1) with L signal.

Bit 7: "Alarm" signal" (H)

HIGH signal Alarm (Axxx)

Meaning
- An alarm (type irrelevant) has occurred.
- This signal remains active until the cause has been eliminated.

Output at terminal strip (CUSA, SCB1) with L signal.

Bit 8: "Setpoint/actual value deviation" signal (L)

LOW signal "Setpoint/actual value deviation" alarm (A034)

Meaning
- There is currently a deviation between the Vd setpoint and Vd actual value which is greater than the setting in P517 (set/act.val.dev. Vd) and active for longer than P518 (set/act.val.dev.time).
- The bit is reset to an H signal as soon as the deviation decreases to below the setting in parameter P517.

Bit 9: "PZD control requested" signal (H)

HIGH signal This signal is always active.

Bit 10: Reserved

Bit 11: "Undervoltage fault" signal (H)

HIGH signal "Undervoltage in DC link" fault (F008)

Meaning
- The DC link voltage has dropped below the permissible limit value.

See Section "Fault and alarm messages"

Output at terminal strip (CUSA, TSY, SCI1/2) with L signal.

Bit 12: "MC energized" signal (H)

HIGH signal The main contactor is energized.

WARNING

On the AFE, this status bit is always connected to digital output 2 on the CUSA. A different wiring is not possible and is also not allowed because the AFE inverter might be destroyed if the main contactor is activated before the DC link has been precharged.

Bit 13: Reserved

Bit 14: "Motor operation" signal (L)

LOW signal AFE operates in rectifier mode (active current >= 0)

Bit 15: Reserved

Bit 16: Reserved

Bit 17: Reserved

Bit 18: "Current limit active" signal (L)

LOW signal AFE operates at the present current limit setting

Meaning

- If the AFE output current is limited, the DC-link voltage can no longer be regulated to the selected setpoint.

Output at terminal strip (CUSA, SCB1) with L signal.

Bit 19: "External fault 1" signal (H)

HIGH signal " External fault 1"

Meaning

- An "External fault 1" is active in control word bit 1.

Output at terminal strip (CUSA, SCB1) with L signal.

Bit 20: "External fault 2" signal (H)

HIGH signal " External fault 2"

Meaning

- An "External fault 2" is active in control word bit 26.

Output at terminal strip (CUSA, SCB1) with L signal.

Bit 21: "External alarm" signal (H)

HIGH signal "External alarm"

Meaning

- An "External alarm 1" is active in control word bit 28 or an "External alarm 2" in control word bit 29.

Output at terminal strip (CUSA, SCB1) with L signal.

Bit 22: "AFE i^2t alarm" signal (H)

HIGH signal "AFE i^2t alarm" (A025)

Meaning

- If the converter continues to operate under the current load conditions, the AFE will be thermally overloaded.

Output at terminal strip (CUSA, SCB1) with L signal.

Bit 23: "AFE overtemperature fault" signal (H)

HIGH signal "Inverter temperature too high" fault (F023)

Meaning
- The inverter temperature limit value has been exceeded.

See Section "Fault and alarm messages".
Output at terminal strip (CUSA, SCB1) with L signal.

Bit 24: "AFE overtemperature alarm" signal (H)

HIGH signal "Inverter temperature too high" alarm (A022)

Meaning
- Alarm-tripping temperature threshold of inverter has been exceeded.

See Section "Fault and alarm messages".
Output at terminal strip (CUSA, SCB1) with L signal

Bit 25: Reserved

Bit 26: Reserved

Bit 27: Reserved

Bit 28: Reserved

Bit 29: "PC energized" signal (H)

HIGH signal The precharging contactor is energized.

WARNING

The status bit is always connected to terminal -X9 on the AFE. A different wiring is not possible and is also not allowed because the AFE inverter might be destroyed if the main contactor is activated before the DC link has been precharged.

Bit 30: Reserved

Bit 31: "Precharging active" signal (H)

HIGH signal PRECHARGING state (010)

Meaning
- The DC link is precharged as soon as an ON command is issued.

14 Faults and Alarms

14.1 Faults

General information about faults

The available information for each fault event comprises the following parameters:

Parameter	r947	Fault number
	r949	Fault value
	r951	Fault texts
	P952	Number of faults
	r748	Fault time

If a fault message is not acknowledged before the electronics supply voltage is disconnected, then the same fault message will be active again when the supply is next turned on. The drive cannot be started until the message has been acknowledged (exception: Automatic restart function is selected, see P366).

Fault messages

No.	Description of fault	Remedial measures
F002	**Precharging** The DC-link voltage failed to reach the minimum limit (≈ P071 line supply voltage) during precharging. The maximum precharging time (P326) has been exceeded.	Check the line voltage, compare with **P071 Line voltage** Check the maximum precharging time (P326);
F003	**Line overvoltage** The voltage at the input terminals is higher than the response threshold (110 % or 120 % of P071 in inverter disabled or Run states). The voltage at the input terminals is higher than the maximum voltage limit + 5 % (E.g.: 460 V + 5 % = 483 V) and DC-link voltage is higher than the maximum continuous permissible value. Line voltage range / Max. contin. perm. Vd at |I| >90% P072 / Max. contin. perm. Vd at |I| ≤ 90% P072 380 V to 460 V / 740 V / 760 V 500 V to 575 V / 922 V / 947 V 660 V to 690 V / 1100 V / 1130 V	Check the line voltage, compare with **P071 Line voltage**
F004	**Line undervoltage** The voltage at the input terminals is less than the response threshold (50 % of P071 during precharging and P074 in operation). The line supply undervoltage fault is also activated if Vsupply < 80 % of P071 and if F013 occurs. If the fault occurs immediately after the drive is started up (for the first time), then the phase sequence may be incorrect. The line must always be connected in a CW phase sequence.	Check the line voltage Check P074 Compare with **P071 Line voltage** Check the line phase sequence

Fault messages		
No.	**Description of fault**	**Remedial measures**
F006	**DC-link overvoltage** The drive has been shut down due to an excessive DC-link voltage. Line voltage range I Shutdown threshold 380 V to 460 V I approx. 820 V 500 V to 575 V I approx. 1020 V 660 V to 690 V I approx. 1220 V	Regenerative feedback power of the connected converter is greater than that of the AFE. Check the following parameters: • **P572 Source regeneration enable** • **P161 Max. generator current limit of AFE** • **P173 Maximum current**
F007	**Electrical off** Failure of the electronic voltage supply -G10 in the mains connection module (external 24 V)	Check the external voltage supply Check the wiring (hardware and software) for the ext. 24 V monitoring function (software FS: 576 = 1004 = digital input 4).
F008	**DC-link undervoltage** The DC-link voltage has dropped below the minimum limit value (≈ line supply voltage)	Check • the main contactor control in cases where the fault occurs immediately after precharging • **P160 Maximum motor current limit** • **P173 Maximum current**
F009	**Supply failure** The line voltage has remained below the undervoltage threshold (P074) for longer than the maximum line failure period (P155). The line failure fault is also activated if the line voltage frequency drops below 40 Hz or exceeds 70 Hz.	Check • the line voltage and line frequency Compare with • the threshold in **Undervoltage threshold P074** • the maximum **Line failure time P155** • the **Line voltage P071**
F011	**Overcurrent** The drive has been shut down as a result of overcurrent. The trip threshold has been exceeded.	Check • the main contactor control in cases where the fault occurs immediately after precharging • the AFE output for short circuit or earth fault
F013	**Overload** The maximum current parameterized in P173 has been exceeded by more than 10% or the load in regenerative feedback mode was so high that the DC-link voltage has reached its maximum value.	Check • the maximum current **P173 $I_{Maximum\ current}$** • the AFE load
F023	**Inverter temp.** The inverter temperature has exceeded its maximum limit. **r949 = 1** Inverter temperature limit is exceeded **r949 = 2** Sensor 1: Break in sensor lead or sensor defective **r949 = 18** Sensor 2: Break in sensor lead or sensor defective **r949 = 34** Sensor 3: Break in sensor lead or sensor defective **r949 = 50** Sensor 4: Break in sensor lead or sensor defective	Measure inlet or ambient air temperature. Apply reduction curves when theta >40 ºC. See section "Technical Data" in Operator's Guide Check • whether fan -E1 is connected and/or rotating in the correct direction. • the air inlet and outlet openings for dirt/blockage. • the temperature sensor connected to -X30
F024	**Overload precharging resistor** Precharging resistor protection has responded during DC-link forming and automatic restart (WEA). Fault F024 occurs when III > 1 % P072 for longer than 1.5 × P326.	Check • for high-resistance short circuit or earth fault during forming or WEA • whether line voltage < 80 % during WEA

Fault messages		
No.	**Description of fault**	**Remedial measures**
F025	**UCE Ph. L1** A UCE shutdown has occurred in phase L1	Check • phase L1 for short circuit or earth fault (-X2:U2 - including motor). • the contacts on the **CU**.
F026	**UCE Ph. L2** A UCE shutdown has occurred in phase L2	Check • phase L2 for short circuit or earth fault (-X2:V2 - including motor). • the contacts on the **CU**.
F027	**UCE Ph. L3** A UCE shutdown has occurred in phase L3	Check • phase L3 for short circuit or earth fault (-X2:W2 - including motor). • the contacts on the **CU**.
F029	**Meas. val. sensing** A fault has occurred in the measured value sensing circuit. • **(r949 = 1)** Offset cannot be adjusted in phase L1. • **(r949 = 2)** Offset cannot be adjusted in phase L2. • **(r949 = 3)** Offset cannot be adjusted in phases L1 and L3.	Defect in the measured value sensing circuit Defect in the power section (valve is not blocking)
F030	**DC link short-circuit** A short-circuit in the DC link has been detected: • **(r949 = 1)** During pre-charging of the DC link, a short-circuit has been detected. • **(r949 = 2)** A DC link short-circuit has been detected during forming. • **(r949 = 3)** A DC link short-circuit has been detected during operation.	Check the DC link Check the load connected to the DC link
F035	**Ext. fault 1** Parameterizable external fault input 1 has been activated	Check • whether an external fault has occurred • whether the lead to the appropriate digital input is interrupted • **P575 Src No Ext Fault1** See section "Digital inputs" in Operator's Guide
F036	**Ext. fault 2** Parameterizable external fault input 2 has been activated	Check • whether an external fault has occurred • whether the lead to the appropriate digital input is interrupted • **P586 Src No Ext Fault2** See section "Digital inputs" in Operator's Guide
F039	**DC link ground fault** An earth fault has been detected during DC-link precharging	Check: Maximum connected inverter power greater than 4 x AFE inverter power? If No: Check the DC link If Yes: Contact your local SIEMENS AG branch
F040	**AS internal** Incorrect operating status	Replace the CUSA (-A10) board
F041	**EEprom fault** A fault occurred as values were been saved to the EEPROM	Replace the CUSA (-A10) board
F042	**Comp. time** Computation time problems	Reduce the computation time load, increase **P308 Sampling time**, check **r725 Available computation time**.

Fault messages		
No.	**Description of fault**	**Remedial measures**
F045	**Opt.brd.HW** A hardware fault occurred as an option board was being accessed	Replace the CUSA board Check the connection between the subrack and option boards
F046	**Par.con.**	Switch the device off and on again. Replace the CUSA (-A10) board.
F047	**Int.comp.time**	Replace the CUSA (-A10) board.
F048	**Interf. pulse freq** Fault during power OFF or pulse inhibit	Switch the device off and the on again. Replace the CUSA (-A10) board if the fault occurs again.
F049	**SW release** The SW versions of the EPROMs on the CU are different. The fault occurs as a result of the comparison of the language EPROM and CU software.	• Replace the language EPROM
F050	**TSY init.** TSY board initialization error	Check whether • the TSY is correctly inserted • the parameter is set correctly for the installed board • **P090 Board Position 2** • **P091 Board position 3** • **r723 PCB Code** • **724 PCB Code**
F060	**MLFB missing** This fault is set if the MLFB = 0 (0.0 kW) when the device exits the INITIALIZATION state. MLFB = order number.	Enter the appropriate MLFB in parameter **P070 MLFB (6SE70..)** after acknowledgement in INITIALIZATION. (MLFB can be entered only if the appropriate access levels are set in the two access parameters.)
F062	**Multiparal.** Fault in connection with the multiparallel circuit has been detected	• Check ImPI and the communications card and if required, replace • Check configuration and connections of the multiparallel circuit • Check parameter settings (**P070 "MLFB(6SE70..)"**) • Replace the CUSA (-A10). • Replace the ImPI
F065	**INT1 telegram** No telegram has been received on interface 1 (SCom1/USS protocol) within the telegram failure period.	• Check the connection CU -X100:1 to 5 or check connection PMU -X300. • Check **P687.01"SCom/SCB TlgOFF"** • Replace the CUSA (-A10).
F070	**SCB init.** SCB board initialization error	**r949 = 1 or 2** • Check the contacts on the SCB and whether the board slot matches the appropriate parameter setting. • **r723 PCB Code ,** • **r724 PCB Code and** • **P090 Board Position 2,** • **P091 Board Position 3** **r949 = 5** Error in initialization data • Check parameters **P682 and P684** **r949 = 6** Timeout during initialization and **r949 = 10** Error in configuration channel • Check parameters **P090, P091, P682 and P684**
F072	**SCB heartb.** SCB is no longer processing the monitoring counter (heartbeat counter).	• Replace the SCB • Check the connection between the subrack and option board
F073	**Aninput1 SL1** Amps at analog input 1, slave1, have dropped below 4mA	Check connection from signal source to SCI1 (slave 1) -X428:4, 5.

Fault messages		
No.	**Description of fault**	**Remedial measures**
F074	**Aninput2 SL1** Amps at analog input 2, slave1, have dropped below 4mA	Check connection from signal source to SCI1 (slave 2) -X428:7, 8.
F075	**Aninput3 SL1** Amps at analog input 3, slave1, have dropped below 4mA	Check connection from signal source to SCI1 (slave 3) -X428:10, 11.
F076	**Aninput1 SL2** Amps at analog input 1, slave2, have dropped below 4mA	Check connection from signal source to SCI1 (slave1) -X428:4, 5.
F077	**Aninput2 SL2** Amps at analog input 2, slave2, have dropped below 4mA	Check connection from signal source to SCI1 (slave 2) -X428:7,8.
F078	**Aninput3 SL2** Amps at analog input 3, slave2, have dropped below 4mA	Check connection from signal source to SCI1 (slave 3) -X428:10, 11.
F079	**SCB telegram** A telegram has not been received from the SCB (USS, peer-to-peer, SCI) within the telegram failure time.	• Check the connections of the SCB1(2). • Check **P687.01"SCom/SCB TlgOFF".** • Replace the SCB1(2). • Replace the CU (-A10).
F080	**TB/CB init.** Board initialization error at the DPR interface	**r949 = 1** TB/CB not inserted or TB/CB board code incorrect **r949 = 2** TB is not compatible **r949 = 3** CB is not compatible **r949 = 5** Error in initialization data Check contacts on the T300 / CB board and whether the board slot matches the appropriate parameter setting; • **P090 Board Position 2,** • **P091 Board Position 3** • **r723 PCB Code,** • **r724 PCB Code** **r949 = 6** Timeout during initialization **r949 = 10** Error in configuration channel Check the CB initialization parameters; • **P918 CB Bus Address,** • **696 to P705 CB Parameters 1 to 10**
F081	**TB/CB heartb.** TB or CB is no longer processing the monitoring counter	• Replace the TB or CB • Check the connection between the subrack and option board
F082	**TB/CB Tlgr.** No new process data have been received from the TB or CB within the telegram failure time.	• Check the connections of the CB/TB. • Check **P695 "CB/TB TlgOFFTime".** • Replace the CB. • Replace the TB.
F091	**Form.interrupt** Forming of the DC link has been interrupted. r949 = 1 Abortion due to another fault r949 = 2 Abortion because Vd too low r949 = 3 Abortion by OFF command r949 = 4 Abortion because no ON command within 20 s of forming function selection	• Depending on the fault • Line voltage too low or incorrect line voltage (P071) parameterized • OFF command • No ON command
F255	Fault in NOVRAM	Switch the device off and then on again. Replace the CU if the fault occurs again.

Table 14-1 Fault numbers, causes and their counter-measures

14.2 Alarms

An alarm message is periodically displayed on the PMU by A=alarm and a 3-digit number. An alarm cannot be acknowledged. It is automatically deleted once the cause has been removed. Several alarms can be active simultaneously, in which case they are displayed one after another.

If the AFE inverter is operated with the OP1S control panel, the warning is displayed in the bottom line of the operation display. The red LED also flashes (refer to the OP1S Operating Instructions).

Alarm messages			
Alarm No.	**Param-No.** Bit No.	**Description**	**Remedial measures**
A001	**P953** 0	**Comp. time** CU board comp. time utilization too high	Check **r725 Available computation time**. Increase **P308 Sampling time**
A015	**P953** 14	**Ext. alarm 1** Parameterizable, external alarm input 1 has been activated	External alarm is active. Check whether the lead to the appropriate digital input is interrupted. Check parameter **P588 Src No Ext Warn1** See section "Digital inputs" in Operator's Guide
A016	**P953** 15	**Ext. alarm 2** Parameterizable, external alarm input 2 has been activated	External alarm is active. Check whether the lead to the appropriate digital input is interrupted. Check parameter **P589 Src No Ext Warn2**. See section "Digital inputs" in Operator's Guide
A017	**P954** 0	**Power supply of the power section** An UCE error is detected during pulse disable. The power supply of the power section is interrupted.	Check the power supply of the power section.
A020	**P954** 3	**Overcurrent** An overcurrent has been detected.	Check the driven load for an overload condition. • Are the dynamic requirements too high?
A021	**P954** 4	**Overvoltage** A DC-link overvoltage condition has been detected.	Check the line voltage. • Are the dynamic requirements too high?
A022	**P954** 5	**Inv.temp.** The alarm activation threshold has been exceeded.	Check **r011 AFE temperature**. Measure inlet or ambient air temperature. Apply reduction curves when theta >40 ºC. See section "Technical Data" in Operator's Guide Check • whether fan -E1 is connected and/or rotating in the correct direction. • the air inlet and outlet openings for dirt/blockage. • the temperature sensor connected to -X30
A025	**P954** 8	**I2t- inv.** The inverter will be thermally overloaded if it continues to operate under the current load conditions.	Check whether the rated output current or peak current (operating class II) is (was) too high. Check **r010 AFE Utilization**

Alarm messages			
Alarm No.	**Param-No.** Bit No.	**Description**	**Remedial measures**
A039	**P955** 6	**Electrical off** The electronics voltage supply is not o.k.	Check • the ext. 24 V voltage supply -G1 • the digital input and signal lead for monitoring of the ext. 24 V voltage supply
A040	**P955** 7	**Supply voltage** The voltage at the input terminals is outside the rated range (< 80 % or > 110 % of P071) in operation	Check • the line voltage • **P071 Line voltage**
A046	**P955** 13	**Current unbalance** The output currents show an unbalance of > 25 % I(conv-rated)	Check • the line connections • the line voltages in the individual phases
A047	**P955** 14	**Reactive current limited** The reactive current of the AFE is limited.	Check the • line voltage (r030) • maximum current (P173) • motor-mode current limit (P160) • generator-mode current limit **(P161)**
A048	**P955** 15	**Vd^2t integrator** The monitoring function of the maximum continuous DC link voltage (using the Vd2t-integrator) has reached 50 % of the final value. If the high DC link voltage is caused by a high capacitive reactive current, then this might be limited (A047). If the high DC link voltage is caused by a high line voltage (r030), the line overvoltage fault (F003) message will be activated eventually (depending on the amplitude of Vd).	Check the • line voltage (r030) • DC-link voltage **(r006)**
A049	**P956** **0**	**No slave** On the ser. I/O (SCB1 with SCI1/2), no slave is connected or fiber optic is interrupted or no supply to slaves.	**P660 SCI AnalogInConf** • Check slave. • Check fiber optic.
A050	**P956** **1**	**Slave incorrect** On the ser. I/O, the slaves connected do not correspond to the parameter setting (slave number or slave type).	Check **P660 SCI AnalogInConf**
A051	**P956** 2	**Peer bdrate** Baud rate for peer connection is too high or different.	Match baud rates of SCB boards involved in the link **P684 SCom/SCB Baud**
A052	**P956** 3	**Peer PZD-L** PZD length set too high for peer connection (>5).	Reduce the number of words **P686 SCom/SCB # PrDat.**.
A053	**P956** 4	**Peer Lng f.** The PZD lengths of the sender and receiver in the peer connection do not match.	Match word lengths of sender and receiver **P686 SCom/SCB # PrDat**
A057	**P956** 8	**TB-Param** Alarm occurs if a TB is logged on and connected, but it does not respond to parameter jobs from the PMU, SCom1 or SCom2 within 6 s.	Replace TB configuration (software).

Alarm No.	Param-No. / Bit No.	Alarm messages: Description	Remedial measures
A065	**P957** / 0	**WEA active** The WEA option **(P366)** restarts the drive. **No** time monitor is activated when the DC link is precharging. The automatic restart process can be aborted with an OFF command.	**CAUTION** The WEA function can place operating personnel at risk. Check whether you really need to use WEA. Change **P366 WEA** if necessary.
A081.. A096	**r958** / 0...15	**CB alarm** See Operator's Guide for CB board	
A097.. A112	**r959** / 0...15	**TB alarm 1** See Operator's Guide for TB board	
A113.. A128	**r960** / 0...15	**TB alarm 2** See Operator's Guide for TB board	

Table 14-2 Alarm numbers, causes and their counter-measures

14.3 Fatal errors (FF)

Fatal errors are serious hardware or software errors which no longer permit normal operation of the unit. They only appear on the PMU in the form "FF<No>". The software is re-booted by actuating any key on the PMU.

FFxx	Fault message	Switch device off and on again. Call service department if fatal fault is displayed again
FF01	**Time sector overflow** A non-removable time sector overflow has been identified in the higher priority time sectors.	Increase sampling time **(P308)** or reduce pulse frequency **(P761)** Replace the CUSA
FF03	**Access error option board** A fatal fault has occurred as external option boards (CB, TB, SCB, TSY ..) were being accessed	Replace the CUSA Replace the LBY Replace the option board
FF06	**Stack overflow** Stack overflow.	Increase sampling time **(P308)** or reduce pulse frequency **(P761)** Replace the CUSA
FFxx	**Any other fatal fault.**	Replace the CUSA

Table 14-3 Fatal errors

15 Maintenance

WARNING

SIMOVERT MASTERDRIVES units are operated at high voltages.
All work carried out on or with the equipment must conform to all the national electrical codes (BGV A2 in Germany).
Maintenance and service work may only be executed by qualified personnel.

Only spare parts authorized by the manufacturer may be used.
The prescribed maintenance intervals and also the instructions for repair and replacement must be complied with.
Hazardous voltages are still present in the drive units up to 5 minutes after the converter has been powered down due to the DC link capacitors. Thus, the unit or the DC link terminals must not be worked on until at least after this delay time.
The power terminals and control terminals can still be at hazardous voltage levels even when the motor is stationary.

If it is absolutely necessary that the drive converter be worked on when powered-up:

- Never touch any live parts.
- Only use the appropriate measuring and test equipment and protective clothing.
- Always stand on an ungrounded, isolated and ESD-compatible pad.

If these warnings are not observed, this can result in death, severe bodily injury or significant material damage.

15.1 Electrical components

15.1.1 AFE basic mains module

Position	Equipment designation		Brief description
1	-A52	VSB module	Line angle and voltage sensing 6SE7090-0XX84-1GA1
2	-K1	Main contactor	Main contactor 230 V, 50/60 Hz 3RT1476-6AP36 (for 370 ... 590 A) 3RT1466-6AP36 (for 210 ... 315 A) 3RT1456-6AP36 (for 146 ... 186 A) 3RT1446-1AL20 (for 92 ... 124 A)
3	-K1 -Z1	Varistor	Main contactor accessory
4	-K4	Contactor	Precharging contactor 230 V, 50/60 Hz 3RT1035-1AL20 (for 510 ... 590 A) 3RT1025-1AL20 (for 210 ... 370 A) 3RT1016-1AP01 (for 92 ... 186 A)
5	-Z4	Varistor	for contactor 230 V, 50/60 Hz
6	-R1...R3	Resistor	Precharging resistors 5 Ohm 5 Ω 6SY7000-0AF51 (for 210...370 A) 10 Ω 6SX7010-0AC80 (for 92...186 A)
7		Cable harness	Signal exchange with AFE inverter 6SY7000-0AE62

Table 15-1 Components of the AFE basic mains module

15.1.2 CleanPower filter

Position	Equipment designation	Brief description
1	-L1 Commutating reactor	Reactor 4EU3652-6UA000A (510 ... 590 A) Reactor 4EU3652-3UB000A (370 A) Reactor 4EU3052-8UA000A (315 A) Reactor 4EU3052-7UA000A (260 A) Reactor 4EU2752-6UA000A (210 A) Reactor 4EU2752-2UB000A (186 A) Reactor 4EU2752-1UB000A (146 A) Reactor 4EU2752-1UB000A (124 A) Reactor 4EP4000-8US00 (92 A)
2	-C4, -C5 Capacitor -C4	Filter capacitor 6SY7000-0AF56 (510 ... 590 A) Filter capacitor 6SY7000-0AF55 (370 A) Filter capacitor 6SY7000-0AF54 (315 A) Filter capacitor 6SY7000-0AF56 (210 ... 260 A) Filter capacitor 6SY7000-0AF55 (146 ... 186 A) Filter capacitor 6SY7000-0AF54 (124 A) Filter capacitor 6SY7000-0AF54 (92 A)
3	-R7.1 ... R9.1 Resistor -R7.2 ... R9.2 -R7 ... R9	Filter res. 6SY7000-0AF67 (510..590 A) Filter res. 6SY7000-0AF67 (370 A) Filter res. 6SY7000-0AF66 (260 ... 315 A) Filter res. 6SY7000-0AF65 (186 … 210 A) Filter res. 6SY7000-0AF64 (124 … 146 A) Filter res. 6SY7000-0AF63 (92 A)
4	-Cg Board (not required for IT system)	Basic RI suppression 6SX7010-0FB10
5	Cable harness (only as of 146 A CleanPower filter)	Measurement tap line voltage 6SY7000-0AE61

Table 15-2 Components of the CleanPower filter without AFE reactor

15.2 AFE inverter maintenance

15.2.1 Replacing the fan

The fan is designed for an operating time of $L_{10} \geq 35\,000$ hours at an ambient temperature of $T_u = 40$ °C. It should be replaced in good time to maintain the availability of the unit.

Construction type G

The fan assembly consists of:

- the fan housing
- one fan

The fan assembly is installed between the capacitor battery and the motor connection.

Replacement

- Withdraw connector X20.
- Remove the cable ties.
- Undo the 2 M6x12 Torx screws.
- Remove the fan assembly by pulling it out forwards.
- Install the new fan assembly by following the same steps in the reverse order.

Before commissioning the new fan, check it for freedom of movement and correct air flow direction.
The air must be expelled upwards out of the device.

Construction type J

The fan assembly consists of:

- the fan housing
- one or two fans
- the starting capacitors

The fan assembly is fitted at the top of the chassis.

- Withdraw connector X20.
- Undo the two M8 screws in the fan assembly.
- Pull the fan assembly out forwards (if necessary, lower it slightly when you pull it out) and store it in a safe place.

CAUTION

The fan assembly weighs about 30 kg!

- Disconnect the cable connections and terminals on the fan.
- Remove the fan support plate from the fan assembly and detach the fan from the support plate.
- Install the new fan assembly in reverse sequence.

Prior to start-up, check that the fan can run freely and check for correct direction of air flow.
The air must be blown upwards out of the unit.

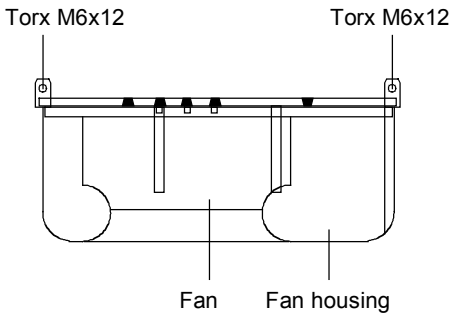

Fig. 15-1 Fan assembly

15.2.2 Replacing the fan fuses (construction type J only)

The fuses are located in a fuse holder which is mounted on a DIN rail at the bottom left of the unit. You must open this holder to replace the fuses.

15.2.3 Replacing the starting capacitor

The starting capacitor is

- on or inside the fan assembly.
- Withdraw the plug connections on the starting capacitor (construction type J).
- next to the fan terminal (construction type G).
- Unscrew the starting capacitor.
- Install the new starting capacitor in reverse sequence (4.5 Nm).

15.2.4 Replacing the capacitor battery

The unit is an assembly which consists of the DC link capacitors, the capacitor support and the DC link bus module.

Construction type G

- Remove the terminal for the balancing resistor (cable eye M6).
- Undo the mechanical mounting.
- Swing the capacitor battery out forwards and lift the unit at an angle of 45 ° out of the converter.

Construction type J

The capacitor battery comprises three assemblies. Each assembly contains a capacitor support and a DC link bus module.

- Undo the plug-in connections
- Undo the mechanical fastening (three screws: Two left, **one** right)

Swing the capacitor sideways until it reaches the limit stop, lift the unit slightly and pull it forwards out of the converter.

CAUTION

The capacitor battery weighs up to 30 kg!

15.2.5 Replacing the PMU

- Remove the grounding cable on the side.
- Press the spring catches on the adapter section carefully together, remove the PMU with adapter from the electronics box.
- Withdraw connector X108 on the CUx board.
- Using a screwdriver, carefully lever the PMU forwards out of the adapter section.
- Install the new PMU in the reverse sequence.

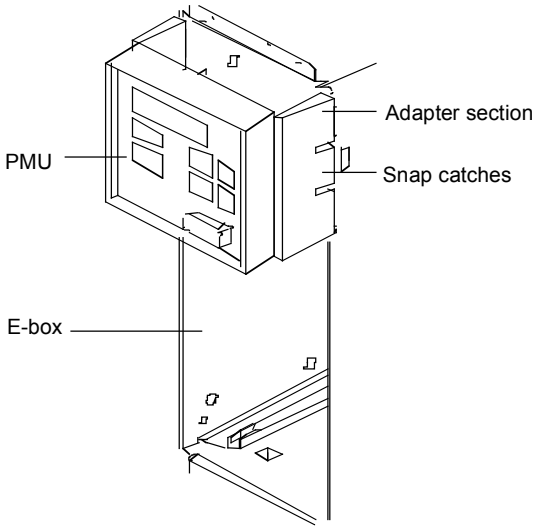

Fig. 15-2 PMU with adapter section on the electronics box

15.3 Fuses

15.3.1 Fan fuses for AFE inverters

Line voltage 3AC 380 V to 460 V	
Order No. 6SE70..	**Fan Fuse (F101 / F102)**
35-1TJ80	FNQ-R-5
36-0TJ80	FNQ-R-5
Order No. 6SE70..	**Fan Fuse (F1 / F2)**
31-1EE80 31-1EE80-1AA0	FNQ-R-2
31-2EF80 31-2EF80-1AA0	FNQ-R-2
31-5EF80 31-5EF80-1AA0	FNQ-R-2
31-8EF80 31-8EF80-1AA0	FNQ-R-2
32-1EG80 32-1EG80-1AA0	FNQ-R-5
32-6EG80 32-6EG80-1AA0	FNQ-R-5
33-2EG80 33-2EG80-1AA0	FNQ-R-5
33-7EG80 33-7EG80-1AA0	FNQ-R-5
Manufacturer: FNQ-R-	Bussmann

15.3.2 DC fuses

Order No.	**Fuse**				
6SE70...	**gR (SITOR)**		**North-America**		
	[A]	**Type**	**[A]**	**Type**	**[V]**
Line voltage 3AC 380 V to 460 V					
31-0EE80	160	3NE3224	250	170M3716	660
31-2EF80	250	3NE3227	350	170M3718	660
31-5EF80	250	3NE3227	350	170M3718	660
31-8EF80	315	3NE3230-0B	450	170M3720	660
32-1EG80	450	3NE3233	550	170M6709	660
32-6EG80	450	3NE3233	550	170M6709	660
33-2EG80	500	3NE3334-0B	630	170M6710	660
33-7EG80	500	3NE3334-0B	630	170M6710	660
35-1EJ80	450	2x3NE3233	550	2x170M6709	660
36-0EJ80	550	2x3NE3335	630	2x170M6710	660

16 Forming

For units in the 400 V and 690 V voltage classes (cf. 9th digit of the MLFB, letter E or H), the DC link capacitors must be formed again after an idle period of more than 2 years.

For units in the 500 V voltage class (cf. 9th digit of the MLFB, letter F), the DC link capacitors must be formed again after an idle period of more than 1 year.

If this is not carried out, the unit can be damaged when the line voltage is powered up.

If the unit was started-up within one year after having been manufactured, the DC link capacitors do not have to be re-formed. The date of manufacture of the unit can be read from the serial number.

How the serial number is made up

(Example: A-J60147512345)

Digit	Example	Meaning
1 and 2	A-	Place of manufacture
3	M	2000
	N	2001
	P	2002
	R	2003
	S	2004
	T	2005
	U	2006
	V	2007
4	1 to 9	January to September
	O	October
	N	November
	D	December
5 to 14		Not relevant for forming

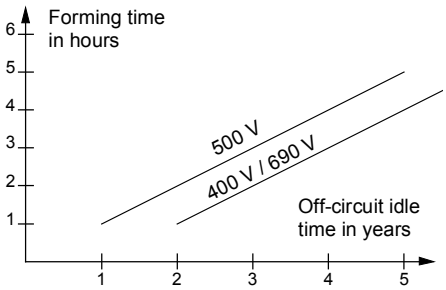

Fig. 16-1 Forming time depending on the idle time of the AFE inverter

P408	**Set forming time (60.0 to 600.0 minutes)**
↓	
P052 = 20	**Select "Form DC link"**
↓	
P key	**The operating display appears:** The AFE must be switched on within 20 s or else a shutdown on faults (F091) will occur (fault value 4).
↓	
Switch on AFE	
↓	**NOTE:** While forming is in progress, the SIMOVERT MASTERDRIVES MC/VC must not be switched on! - The DC link forming operation is carried out (forming period as set in P408). - During the forming period set in P408, the pre-charging contactor is energized and de-energized in such a way that the DC link capacitor is charged up to the line voltage peak value. - The current limit set in P160 is not effective with respect to the forming operation!
End	On completion of the function, operating display "Ready" (009) appears.

17 Technical Data

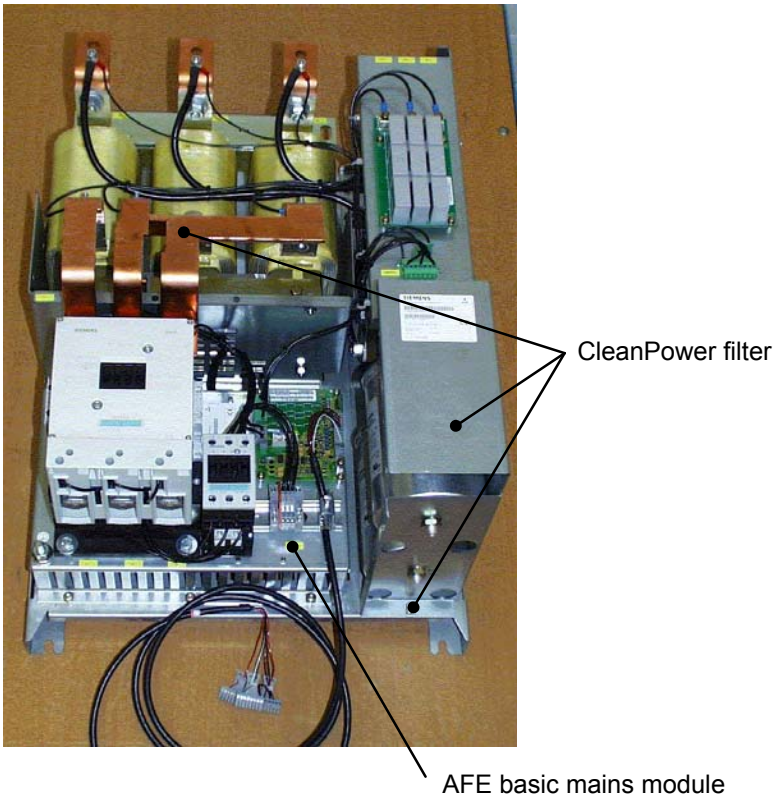

Fig. 17-1 AFE basic mains module mounted on CleanPower filter (type of construction G)

Fig. 17-2 AFE reactor for AFE inverters 510...590 A / 400 V

17.1 AFE basic mains module and CleanPower filter

EU low-voltage directive 73/23/EEC and RL93/68/EEC	EN 50178
EU machine directive 89/392/EEC	EN 60204-1
UL conformity	Only use components conforming to UL
Type of cooling	Air cooling
Permissible ambient and cooling-medium temperature • during operation • during storage, transport	 0° C to +50° C (32° F to 114° F) -25° C to +70° C (-13° F to 158° F)
Installation height	See operating manual for MASTERDRIVES inverters, construction type J and construction types E to G
Permissible humidity rating	Relative humidity ≤ 95 % during transport and storage ≤ 85 % during operation (moisture condensation not permissible)
Climatic class	Class 3K3 to DIN IEC 721-3-3 (during operation)
Pollution degree	Pollution degree 2 to IEC 664-1 (DIN VDE 0110, Part 1). Moisture condensation during operation is not permissible
Overvoltage category	Category III to IEC 664-1 (DIN VDE 0110, Part 2)
Degree of protection	to EN 60529 IP00
Radio interference suppression Standard Options	to EN 61800-3 No radio interference suppression Radio interference suppression filter for Class A1 to EN 55011
Mechanical specifications • Vibrations During stationary use: Constant amplitude - of deflection - of acceleration During transport: - of deflection - of acceleration • Shocks	 to DIN IEC 68-2-6 0.075 mm in the frequency range 10 Hz to 58 Hz 9.8 m/s^2 in the frequency range > 58 Hz to 500 Hz 3.5 mm in the frequency range 5 Hz to 9 Hz 9.8 m/s^2 in the frequency range > 9 Hz to 500 Hz to DIN IEC 68-2-27 / 08.89 30 g, 16 ms half-sine shock
Mechanical environmental conditions	Class 3M4 to DIN IEC 721-1:1991

Table 17-1 General technical data

Supply system type	TN-C; 3/PEN	
Mains voltage	3AC 400 V	
Mains frequency	50 Hz / 60 Hz	
Rated operating voltage	3 AC 380 (-20 %) V to 3AC 460 (+5 %) V)	
Rated current	92 A, 124 A, 146 A, 186 A, 210 A, 260 A, 315 A, 370 A, 510...590 A	
Power loss	CleanPower filter AFE basic mains module AFE reactor	Approx. 200 Watt (construction types E and F) Approx. 300 Watt (construction type G) Approx. 500 Watt (construction type J) Negligible See below
Control voltage / auxiliary supply	DC24, 1 AC 230 V	
Incoming fuse	See operating manual for AFE chassis units	
Short-circuit strength	Depends on incoming fuse	
Protection class to EN50178	I	
Protective measures	Cover with large surface against direct contact, in case of indirect contact automatic disconnection by overcurrent protective device in the TN system	

Table 17-2 Electrical technical data

Dimensions	CleanPower filter 210 A ... 590 A: 502x700x377 BxHxT mm 124 A ...186 A: 439x700x377 BxHxT mm 92 A: 243x700x377 BxHxT mm AFE basic mains module 210 A … 590 A: 354x260x290 BxHxT mm 146 A … 186 A: 290x260x235 BxHxT mm 92 A ... 124 A: 235x260x211 BxHxT mm
Weight	CleanPower filter 510 A … 590 A: 78 kg 370 A: 70 kg 315 A: 65 kg 260 A: 55 kg 210 A: 50 kg 186 A: 49 kg 124 A … 146 A: 47 kg 92 A: 26 kg AFE basic mains module 370 A … 590 A 16 kg 210 A … 315 A 14 kg 146 A ... 186 A 8 kg 92 A ... 124 A 6 kg
Surface	Housing sendzimized
Tank	Mounting plate special housing

Table 17-3 Mechanical technical data

The machine control is manufactured in accordance with DIN EN 60439-1, also taking into account DIN EN 60204-1. In the delivery state, the protection against indirect contact for the machine control is afforded by automatic disconnection in the TN system. If protection against indirect contact with the equipment is to be afforded by a different system, the circuit configuration must be adapted accordingly.

DIN EN 60204-1 specifies that only electricians and/or other personnel with proper training in handling electrical circuitry may have access to the internal components of the electrical system.

The electronic and associated electrical components are installed according to the recommendations of the relevant component manufacturers. The characteristics specified in Section 3 apply only on condition that the low-voltage switchgear combination is used in accordance with these recommendations and those of the switchgear combination manufacturer.

Implementation of the requirements of Council Directive 98/37/EEC – Machinery Directive – is guaranteed when the machine is in the pre-commissioned state.

17.2 AFE reactor for construction types E to G

MLFB	6SE703x-xES87-1FG1		
Rated voltage Rated frequency Degree of protection / Temperature class	480 V 50/60 Hz IP00 / T40/F		
x-x	1-0	1-2	1-5
Rated current	94 A	128 A	155 A
Power loss	400 Watt	550 Watt	650 Watt
Dimensions (max.)	[mm]	[mm]	[mm]
• Width • Height • Depth	300 267 177	355 330 178	355 327 193
Weight approx.	50 kg	70 kg	75 kg

Table 17-4 Technical data for AFE reactor construction types E and F

MLFB	6SE703x-xES87-1FG1			
Rated voltage Rated frequency Degree of protection / Temperature class	480 V 50/60 Hz IP00 / T40/F			
x-x	2-1	2-6	3-2	3-7
Rated current	215 A	265 A	330 A	374 A
Power loss	900 Watt	1150 Watt	1200 Watt	1250 Watt
Dimensions (max.)	[mm]	[mm]	[mm]	[mm]
• Width • Height • Depth	420 384 204	420 384 204	480 380 276	480 380 276
Weight approx.	90 kg	105 kg	160 kg	165 kg

Table 17-5 Technical data for AFE reactor construction type G

17.3 AFE reactor for construction type J

MLFB	6SE7036-0ES87-1FG1
Rated voltage Rated frequency Degree of protection / Temperature class	480 V 50/60 Hz IP00 / T40/F
Rated current Power loss (at 620 A)	620 A 2500 Watt
Dimensions (max.) • Width • Height • Depth	[mm] 540 500 382
Weight approx.	230 kg

Table 17-6 Technical data for AFE reactor construction type J

17.4 AFE inverter

EU low-voltage directive 73/23/EEC and RL93/68/EEC	EN 50178
EU directive EMC 89/336/EEC	EN 61800-3
EU machine directive 89/392/EEC	EN 60204-1
Approval	UL: E 145 153 CSA: LR 21 927
Type of cooling	Air cooling with built-in fan
Permissible ambient and cooling-medium temperature • during operation • during storage • during transport	 0° C to +40° C (32° F to 104° F) (up to 50 °C, see Fig. "Derating curves") -25° C to +70° C (-13° F to 158° F) -25° C to +70° C (-13° F to 158° F)
Installation height	≤ 1000 m above sea level (100 % load capability) > 1000 m to 3500 m above sea level (for load capability. see Fig. "Derating curves")
Permissible humidity rating	Relative humidity ≤ 95 % during transport and storage ≤ 85 % during operation (moisture condensation not permissible)
Climatic class	Class 3K3 to DIN IEC 721-3-3 (during operation)
Pollution degree	Pollution degree 2 to IEC 664-1 (DIN VDE 0110. Part 1). Moisture condensation during operation is not permissible
Overvoltage category	Category III to IEC 664-1 (DIN VDE 0110, Part 2)
Degree of protection	EN 60529 IP00
Class of protection	Class 1 to IEC 536 (DIN VDE 0106, Part 1)
Shock protection	to EN 60204-1 and DIN VDE 0106 Part 100 (BGV A2)
Radio interference suppression • Standard • Options	to EN 61800-3 No radio interference suppression Radio interference suppression filter for Class A1 to EN 55011
Interference immunity	Industrial to EN 61800-3
Paint finish	For interior installation
Mechanical specifications • Vibrations During stationary use: Constant amplitude - of deflection - of acceleration During transport: - of deflection - of acceleration • Shocks	 to DIN IEC 68-2-6 0.075 mm in the frequency range 10 Hz to 58 Hz 9.8 m/s² in the frequency range > 58 Hz to 500 Hz 3.5 mm in the frequency range 5 Hz to 9 Hz 9.8 m/s² in the frequency range > 9 Hz to 500 Hz to DIN IEC 68-2-27 / 08.89 30 g, 16 ms half-sine shock

Table 17-7 AFE inverter, general data

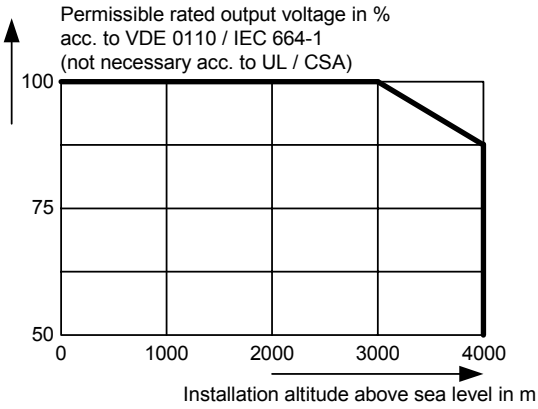

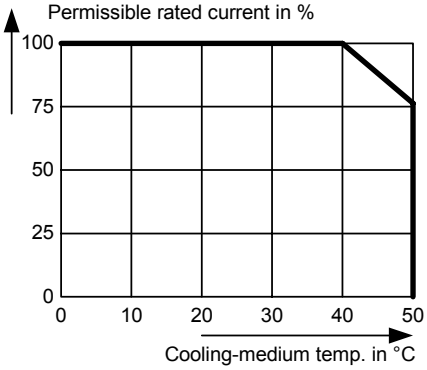

Temp [°C]	Derating factor K_2
50	0.76
45	0.879
40	1.0
35	1.125 *
30	1.25 *
25	1.375 *

* See the following Note

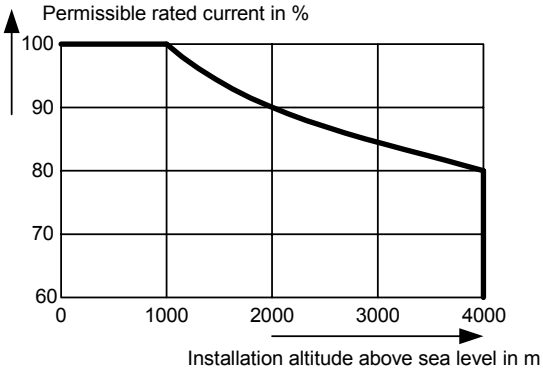

Altitude [m]	Derating factor K_1
1000	1.0
2000	0.9
3000	0.845
4000	0.8

Fig. 17-3 Derating curves

The derating of the permissible rated current for installation altitudes of over 1000 m and at ambient temperatures below 40 °C is calculated as follows:

Total derating = $\text{Derating}_{\text{altitude}}$ x $\text{Derating}_{\text{ambient temperature}}$

$K = K_1 \times K_2$

NOTE

It must be borne in mind that total derating must **not be greater** than 1!

Example: Altitude: 3000 m $K_1 = 0.845$
Ambient temperature: 35 °C $K_2 = 1.125$

→ Total derating = 0.845 x 1.125 = 0.95

Designation	Value					
Order No. 6SE70...	35-1EJ80	36-0EJ80	33-7EG80	33-2EG80	32-6EG80	32-1EG80
Rated voltage [V] • Input • Output	3 AC 380 (-20 %) to 460 (+5 %) DC to 740					
Rated frequency [Hz]	50 / 60					
Rated current [A] • Input 3 AC • Output DC	510 570	560 630	370 425	315 360	260 300	210 240
Rated output [kVA]	330...400	360...440				
Auxiliary current supply [V]	DC 24 (20 - 30)					
• Max. aux. curr. requirement [A] Standard version at 20 V	4.0		2.5			
• Max. aux. curr. requirement [A] Standard version at 20 V	6.2		3.6			
Auxiliary current supply fan [V]	1 AC or 2 AC 230					
• Aux. curr. requirem. at 50 Hz [A]	2.2		0.95			
• Aux. curr. requirem. at 60 Hz [A]	3.4		1.4			
Pulse frequency [kHz]	3	3	3	3	3	3
Load class II to EN 60 146-1-1						
Base load current [A]	0.91 x rated output current					
Base load duration [s]	240					
Overload current [A]	1.36 x rated output current					
Overload duration [s]	60					
Losses, cooling, power factor						
Power factor AFE inv. cosφ	< 0.99					
Efficiency η (rated operation)	≥ 0.98	≥ 0.97	≥ 0.97			
Power loss [kW]	5.8	6.8	4.05	3.47	2.75	2.18
Cooling-air requirement [m³/s]	0.46	0.46	0.41	0.41	0.31	0.31
Sound pressure levels, types of construction, dimensions, weights						
Sound pressure level IP00[dB(A)]	79	77	82	82	80	80
Type of construction	J	J	G	G	G	G
Dimensions [mm] • Width • Height • Depth	800 1400 565	800 1400 565	508 1450 465	508 1450 465	508 1450 465	508 1450 465
Weight approx. [kg]	250	250	155	155	155	155

Table 17-8 Air-cooled AFE inverters, construction types G and J

Bezeichnung	Value					
Order No. 6SE70...	31-0EE80	31-2EF80	31-5EF80	31-8EF80		
Rated voltage [V] • Input • Output	3 AC 380 (-20 %) to 460 (+5 %) DC to 740					
Rated frequency [Hz]	50 / 60					
Rated current [A] • Input 3 AC • Output DC	92 105	124 140	146 165	186 215		
Rated output [kVA]	58...70	78...95	90...110	115...135		
Auxiliary current supply [V]	DC 24 (20 - 30)					
• Max. aux. curr. requirement [A] Standard version at 20 V	1.7		2.1			
• Max. aux. curr. requirement [A] Standard version at 20 V	2.7		3.2			
Auxiliary current supply fan [V]	1 AC or 2 AC 230					
• Aux. curr. requirem. at 50 Hz [A]	0.43		0.80			
• Aux. curr. requirem. at 60 Hz [A]	0.49		1.2			
Pulse frequency [kHz]	3	3	3	3		
Load class II to EN 60 146-1-1						
Base load current [A]	0.91 x rated output current					
Base load duration [s]	240					
Overload current [A]	1.36 x rated output current					
Overload duration [s]	60					
Losses, cooling, power factor						
Power factor AFE inv. cosφ	< 0.99					
Efficiency η (rated operation)	≥ 0.97	≥ 0.97	≥ 0.97			
Power loss [kW]	1.05	1.35	1.56	1.70		
Cooling-air requirement [m³/s]	0.10	0.14	0.14	0.14		
Sound pressure levels, types of construction, dimensions, weights						
Sound pressure level IP00 [dB(A)]	69	69	69	69		
Dimensions	E	F	F	F		
Abmessungen [mm] • Width • Höhe • Depth	270 1050 350	360 1050 350	360 1050 350	360 1050 350		
Weight approx. [kg]	55	65	65	65		

Table 17-9 Air-cooled AFE inverters, construction types E and F

18 Environmental Friendliness

Environmental aspects during development

The number of components has been significantly reduced over earlier converter series by the use of highly integrated components and the modular design of the complete series. Thus, the energy requirement during production has been reduced.

Special significance was placed on the reduction of the volume, weight and variety of metal and plastic components.

Plastic components used

ABS: PMU board
LOGO

LDPE: Capacitor ring

PA6.6: Fuse holder, mounting strip, capacitor holder, cable holder, terminal blocks, terminal strip, supports, PMU adapter, covers, cable holders

PC: Covers

PP: Insulating plates
bus retrofit

PS: Fan housing

UP: Clamping section fastening bolts, tensioning washer

Halogen-containing flame retardants were, for all essential components, replaced by environmentally-friendly flame retardants.

Environmental compatibility was an important criterion when selecting the supplied components.

Environmental aspects during production

Purchased components are generally supplied in recyclable packaging.

Surface finishes and coatings were eliminated with the exception of the galvanized sheet steel side panels.

ASIC devices and SMD devices were used on the boards.

The production is emission-free.

Environmental aspects for disposal

The unit can be broken down into recyclable mechanical components as a result of easily releasable screw and snap connections.

The plastic components are to DIN 54840 and have a recycling symbol.

After the service life has expired, the product must be disposed of in accordance with the applicable national regulations.

19 Appendix

Appendix to operating manual

Order number: 6SE708x-xCX86-2BA1
x-x stands for language code
e.g. 0-0 for German

SIMOVERT MASTERDRIVES
Active Front End (AFE)

AFE rectifier/regenerative feedback unit AC-DC

Chassis unit construction types E to G and J
400 V / 92 A to 370 A and 510 A to 590 A
with modular mains connection

Contents

- Circuit diagram for CleanPower filter
- Circuit diagram for AFE basic mains module
- Dimension sheet for AFE inverter construction types E to G and J
- Dimension sheet CleanPower filter mounted with AFE basic mains module

SIEMENS

SCHALTUNGSUNTERLAGEN / Diagram and charts

Modular line connection
for AFE inverter

Version date 28.04.2005

SIEMENS AG

AUTOMATION & DRIVES
SYSTEMS ENGINEERING
SYSTEMS ENGINEERING PLANT CHEMNITZ

Documentation label A5E00200986B-A3

=INHALT/1

Contents

Column X: an automatically generated page was revised manually

WUP1204D / 28. Mai.1993

Enclosure	Location	Page	Name of page	Additional field on page	Date	Responsible	X
COVER SHEET		1	Cover sheet		28.04.2005	Ahrent	
CONTENTS		1	Contents		28.04.2005	KS2	
CPF		1	CleanPower filter 92A - 590A / 400V	6SE703.-.E.87-1FC5	28.04.2005	Ahrent	
NBM...47A		1	Basic mains module 10,2A - 47A / 400V	6SE7024-7EC83-2NB1	28.04.2005	Ahrent	
NBM...72A		1	Basic mains module 59A - 72A / 400V	6SE7027-2ED83-2NB1	28.04.2005	Ahrent	
NBM...590A		1	Basic mains module 92A - 590A / 400V	6SE703.-.ED83-2NB1	28.04.2005	Ahrent	

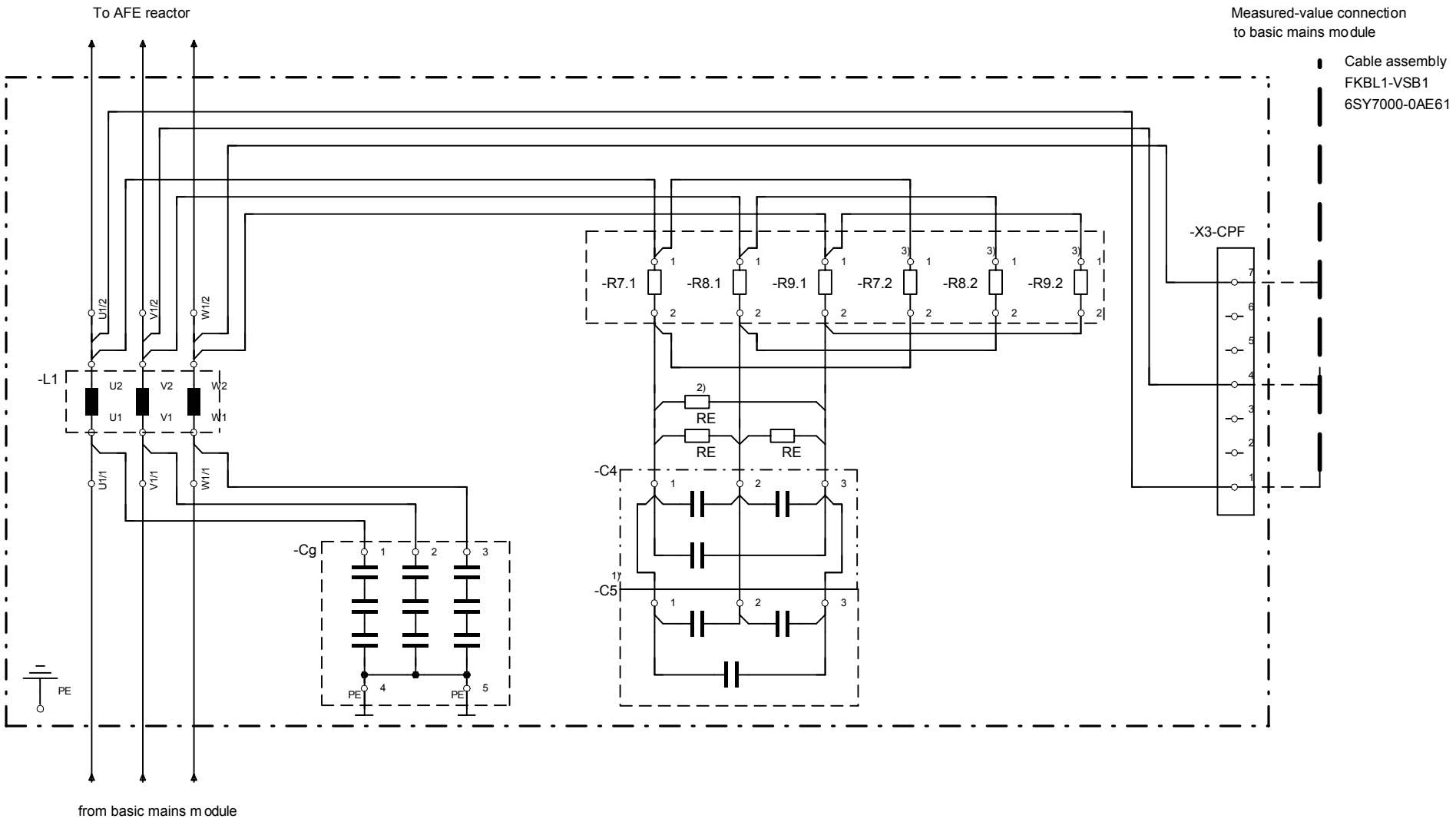

1) -C5 connected in parallel to -C4
available from 160 kW

2) Discharge resistors
(inserted in connection terminal -C4 or -C5)

3) -R7.1 connected in parallel to -R7.2
-R8.1 connected in parallel to -R8.2
-R9.1 connected in parallel to -R9.2
} available from 315 kW

MLFB-No.:		
	92A :	6SE7031-0EB87-1FC5
	124A :	6SE7031-2EC87-1FC5
	146A :	6SE7031-5EC87-1FC5
	186A :	6SE7031-8EC87-1FC5
	210A :	6SE7032-1ED87-1FC5
	260A :	6SE7032-6ED87-1FC5
	315A :	6SE7033-2ED87-1FC5
	370A :	6SE7033-7ED87-1FC5
	510..590A :	6SE7036-0ED87-1FC5

=CONTENTS/1

=NBM...47A/1

			Datum	01.12.2003	SIMOVERT-MASTERDRIVES AFE	SIEMENS AG	CleanPower filter	6SE703.-.E.87-1FC5	= CPF	
A379A75719	19.04.05	Ahr	Bearb.	Ahrent	Modular line connection	A&D SE WKC	92A - 590A / 400V		+	
A279A39719			Gepr.	Fries MCPM				A5E00200986 B-A3	Bl.	1
Änderung	Datum	Name	Norm		Urspr.	Ers.f.	Ers.d.			1 Bl.

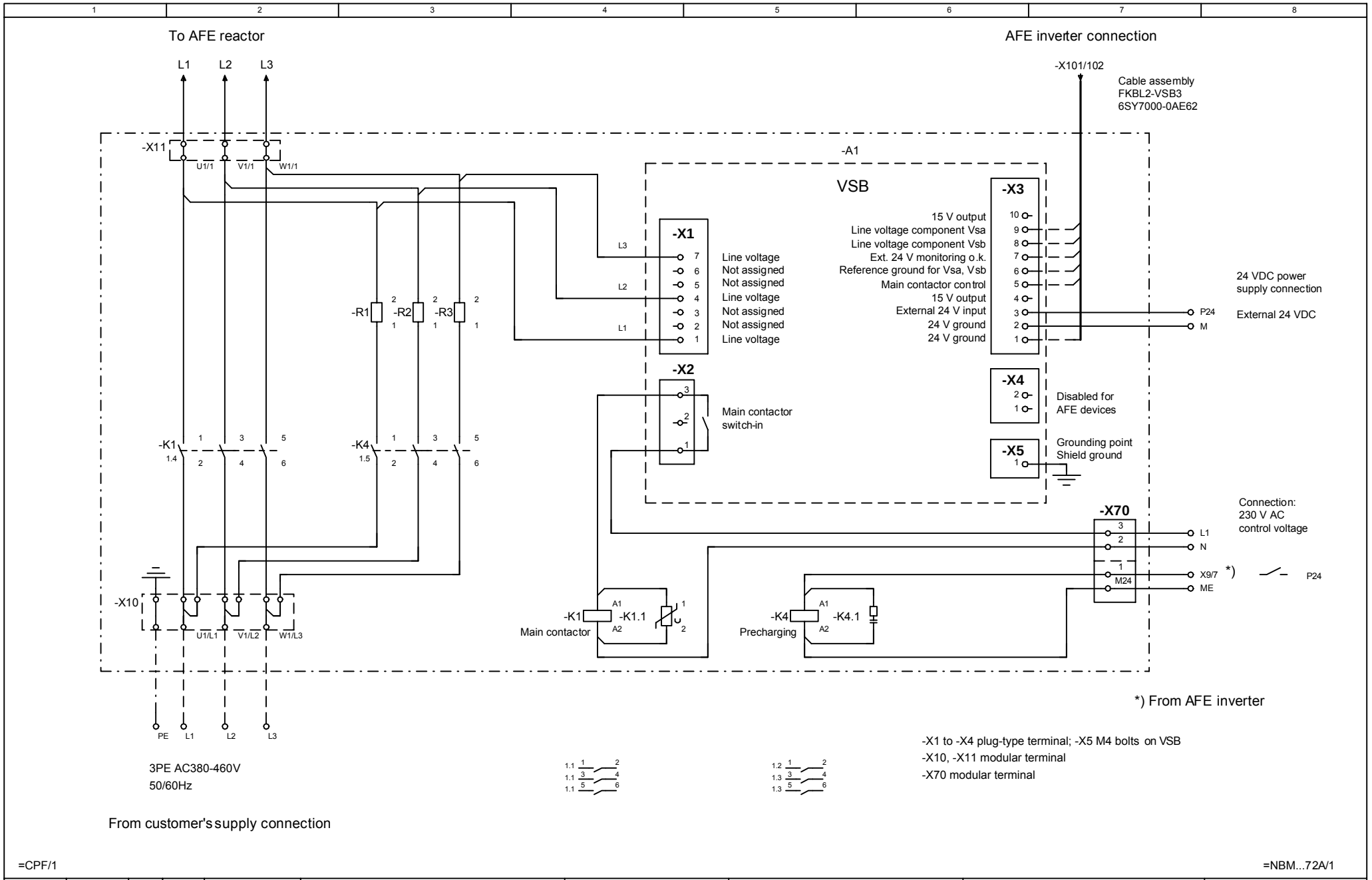

			Datum	01.12.2003	SIMOVERT-MASTERDRIVES AFE	SIEMENS AG	Basic mains module	6SE7024-7EC83-2NB1	= NBM...47A	
A379A75719	19.04.05	Ahr	Bearb.	Ahrent	Modular line connection	A&D SE WKC	10.2A - 47A / 400V		+	
A279A39719			Gepr.	Fries MCPM						
Änderung	Datum	Name	Norm		Urspr.	Ers.f.	Ers.d.		A5E00200986 B-A3	Bl. 1 / 1 Bl.

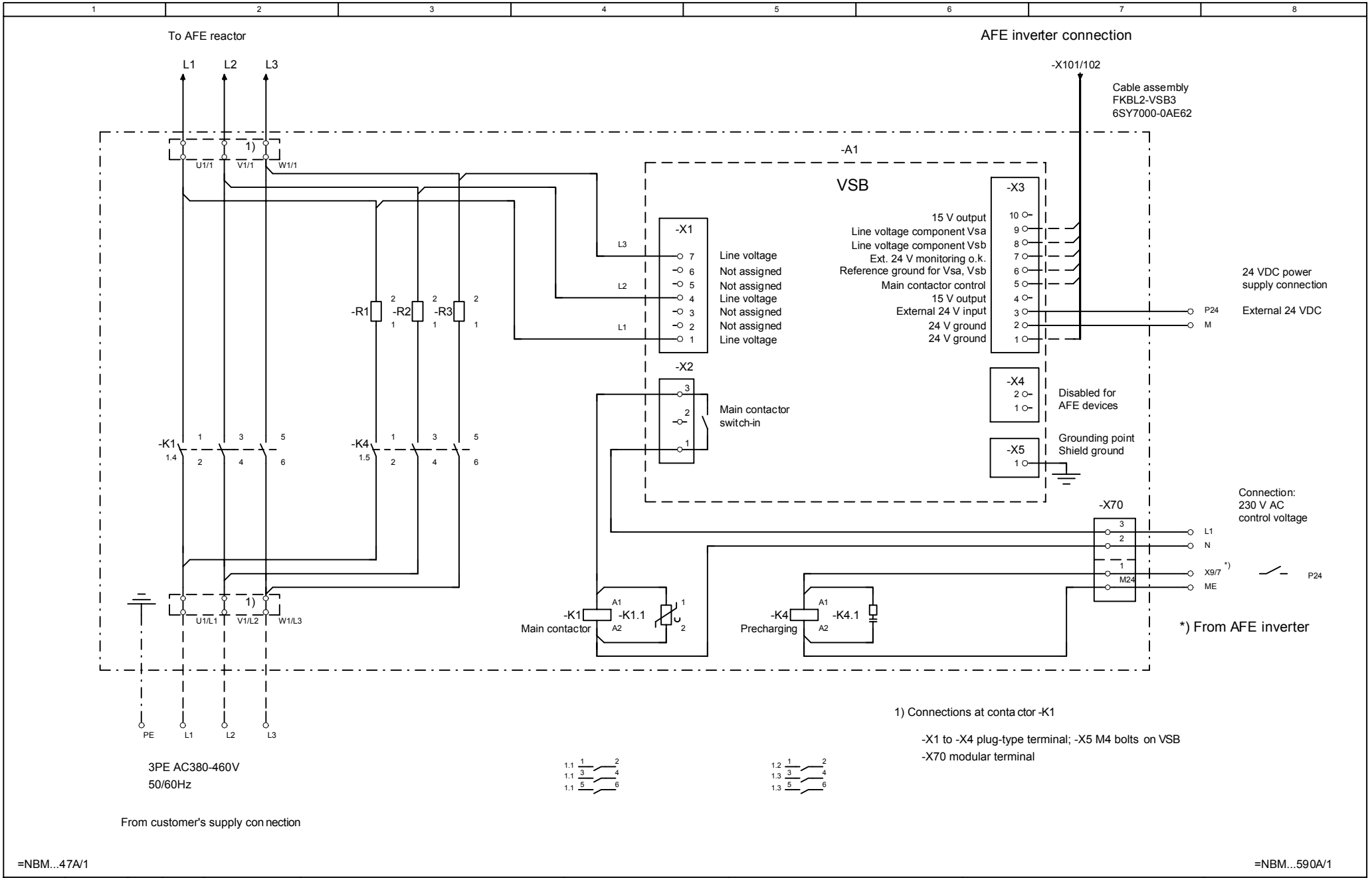

			Datum	01.12.2003	SIMOVERT-MASTERDRIVES AFE	SIEMENS AG	Basic mains module	6SE7027-2ED83-2NB1	= NBM...72A		
A379A75719	19.04.05	Ahr	Bearb.	Ahrent	Modular line connection	A&D SE WKC	59A - 72A / 400V		+		
A279A39719			Gepr.	Fries MCPM						A5E00200986 B-A3	Bl. 1
Änderung	Datum	Name	Norm		Urspr.	Ersf.	Ersd.				1 Bl.

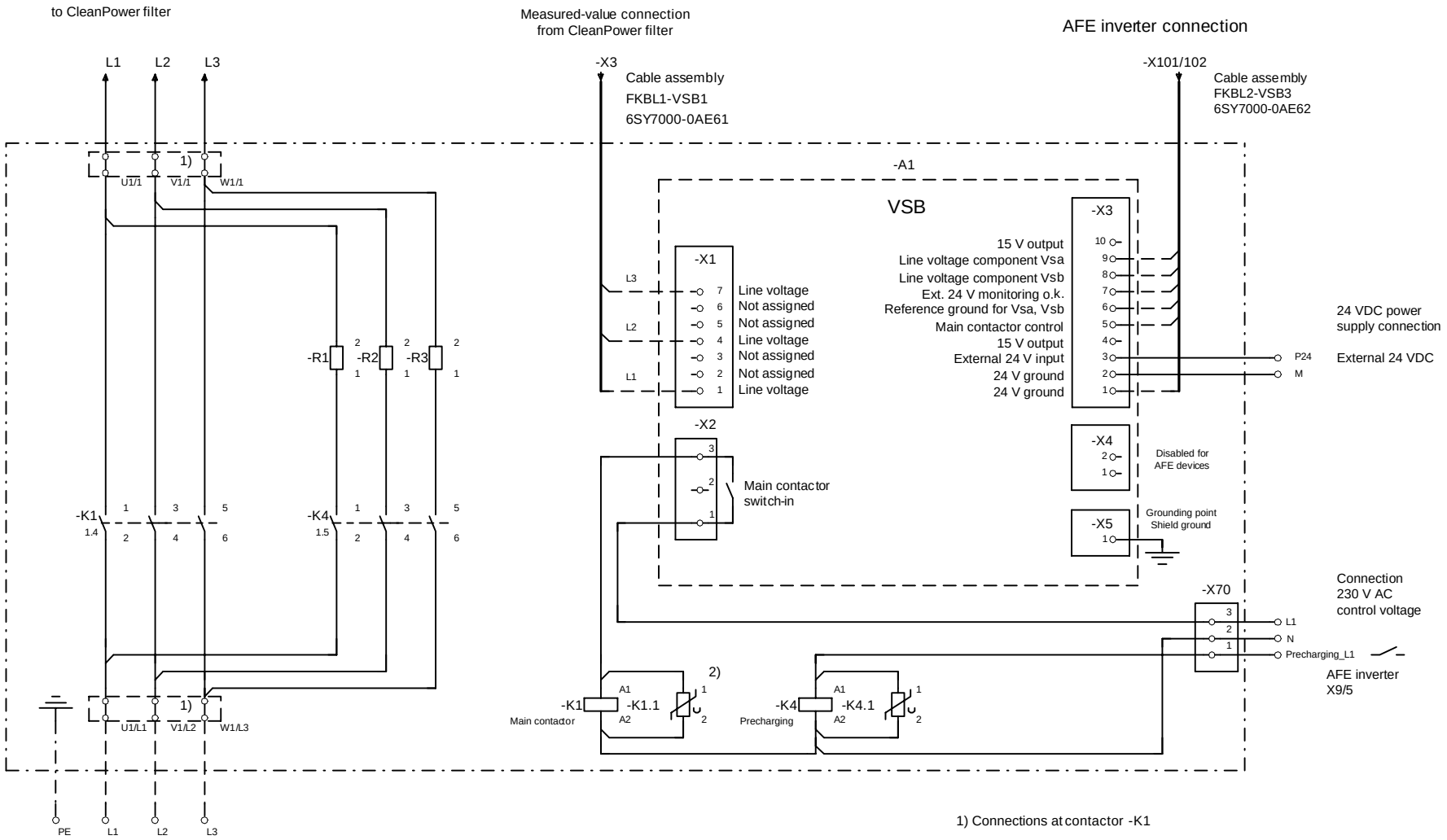

1) Connections at contactor -K1

2) Contactor suppressor circuit for NBM 92 to 124 A

-X1 to -X4 plug-type terminal; -X5 M4 bolts on VSB
-X70 modular terminal

=NBM...72A/1

			Datum	01.12.2003	SIMOVERT-MASTERDRIVES AFE	SIEMENS AG	Basic mains module	6SE703.-.ED83-2NB1	= NBM...590A
A379A75719	19.04.05 Ahr.		Bearb.	Ahrent	Modular line connection	A&D SE WKC	92A - 590A / 400V		+
A279A39719			Gepr.	Fries MCPM					Bl. 1
Änderung	Datum	Name	Norm		Urspr. / Ers.f.	Ers.d.		A5E00200986 B-A3	1 Bl.

CAD-Zeichnung
Manuelle Änderung
nicht zulässig

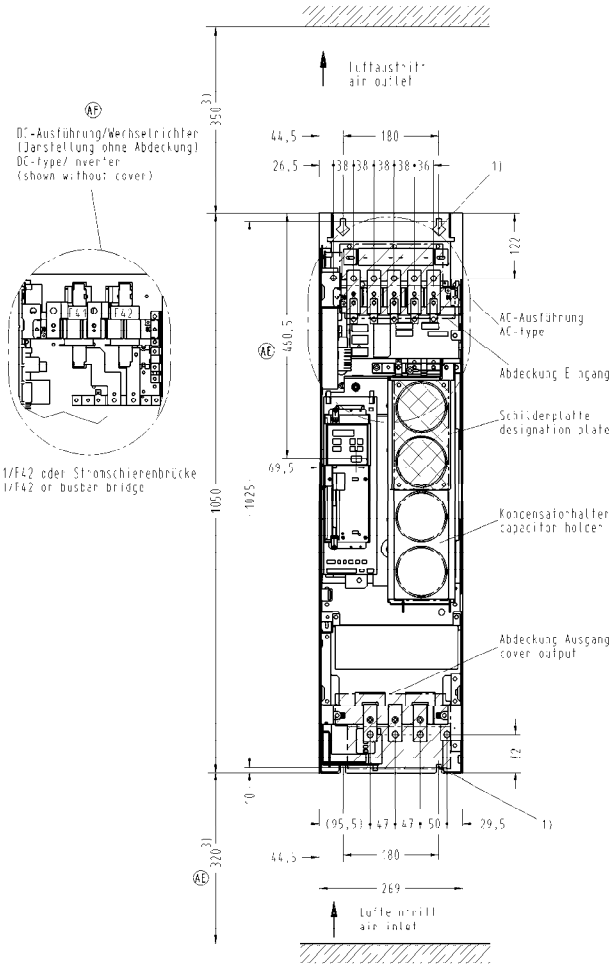

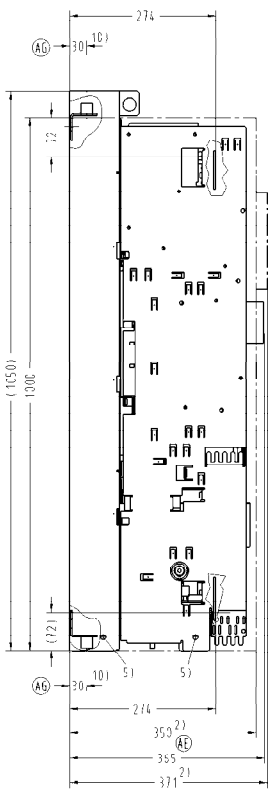

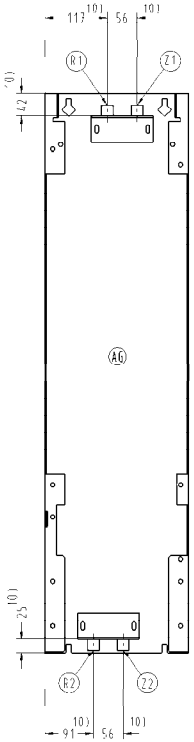

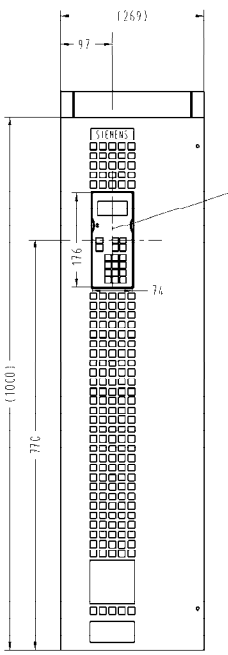

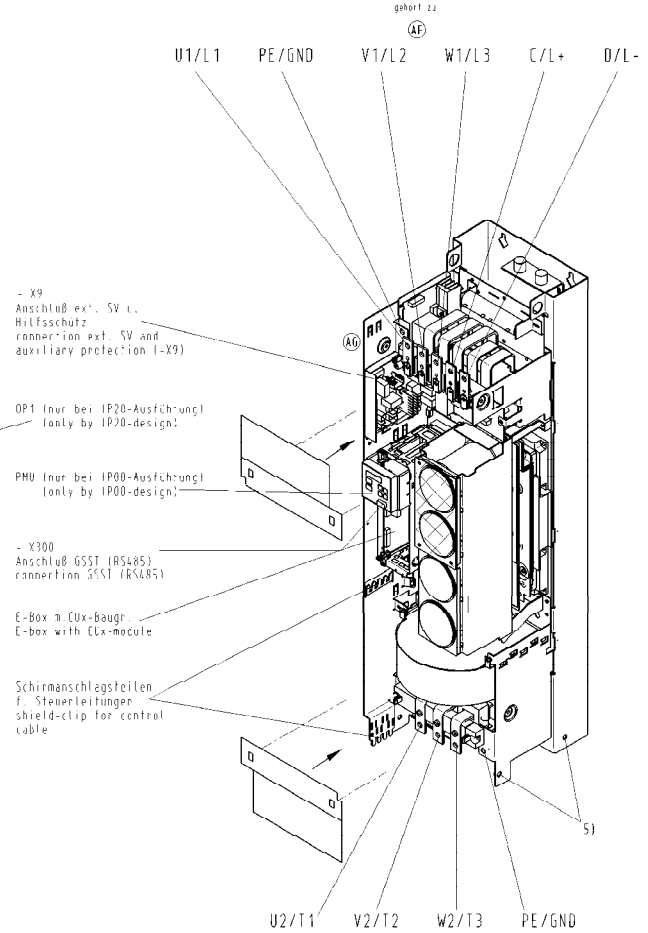

(Z1) (Z2) = Zulauf, Anschlussmöglichkeit für Kühlwasserschlauch 1/2 Zoll
input, possible connection for cool water pipe 1/2 zoll

(R1) (R2) = Rücklauf, Anschlussmöglichkeit für Kühlwasserschlauch 1/2 Zoll
output, possible connection for cool water pipe 1/2 zoll

(AG)

(R2) + (Z2) oder (R1) + (Z1) verschlossen je nach Anwendungsfall

(R2) + (Z2) or (R1) + (Z1) closed acc. to application

1) Schrank-/Wandbefestigung mit Schraube M8
Cabinet-/wall-mounting with screw M8

2) Schutzart IP20
Protection IP20

3) Luftraum für Kühlung
Space required for cooling

4) Gewicht / Weight: IP00 = 55kg / IP20 = 70kg

5) Nach Abnahme der Transportbleche sind hier Anschraubmöglichkeiten (M8) für Blechteile zur Schirmauflage der Motorleitungen./
After removing transport brackets, there are possibilities (M8) for mounting sheet metal parts for sheeld connection of motor cables.

(AG) 10) gilt für Wasserausführung
used by water cooling version

Maßblatt / Dimension drawing
Maße in mm / Dimension in mm

Max. Umgebungstemp. = 40°C
Max. ambient temp. = 40°C

U1/V1/W1 nur bei AC-Ausführung
L1/L2/L3 only by AC-version

(AD) Geräuschpegel: 71 db A
Noise level: 71 db A

Anschlüsse U1/V1/W1/U2/V2/W2/C/D/PE1/PE2 Ø11 (M10)
Anschlußquerschnitte bei IP00 max. 2x95mm²
IP20 max. 2x70mm²
(Querschnitt der Stromschienen: AC/DC = 25x5 mm)
Connection L1/L2/L3/T1/T2/T3/L+/L-/GND Ø11 (M10)
Wire range by IP00 max. 2x95mm²
IP20 max. 2x70mm²
(cross section of current bars. AC/DC = 25x5 mm)

Achtung: Schwerpunktverlagerung
Attention: Displacement of the centre of gravity

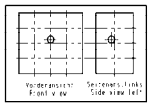

Confié à titre de secret d'entreprise. Tous droits réservés
Confiado como secreto industrial. Nos reservamos todos los derechos
Comunicado como segredo empresarial. Reservados todos os direitos
*Ihr reproduction or use of this document or its contents is not permitted without express written authority. Offenders will be liable for damages. All rights, including rights created by patent grant or registration of a utility model or design, are reserved.
Weitergabe sowie Vervielfältigung dieser Unterlage, Verwertung und Mitteilung ihres Inhalts nicht gestattet, soweit nicht ausdrücklich zugestanden. Zuwiderhandlungen verpflichten zu Schadensersatz. Alle Rechte vorbehalten, insbesondere für den Fall der Patenterteilung oder GM-Eintragung.

Angaben für Eilaufträge
Stückzahl
Termin
Eilbedürftig ja/nein

hierzu:

		Allg. Toleranz ISO 2768-mK Tolerierung ISO 8015	Oberfläche -----	Maßstab 1.5	kg/Stück 4)
				Datum 22.06.95	Baugröße / unit size E (5) 6SE70 - E
				Bearb. Hagen	
A5	587615	19.10.99	Hag	Gepr. S.ARTUS Syrbo	SIMOVERT Master Drive Chassis unit
A4	986717	30.10.98	Hag	Norm	type 6SE70
A3	986187	15.01.98	Mg	Ers. AGD ML 245	
A2	984042	26.08.97	Ba	SIEMENS Geschäftsbereich Erlangen FDB	1SE.476245.9000.00 MB AG
A1	211981	7.08.96	Ba		Blatt
A0	211842	29.02.96	Ba		Ersetzt durch
Zust.	Änderung	Datum	Name		Ersatz für/ersetzt durch

I-deas MS

CAD-Zeichnung
Manuelle Änderung
nicht zulässig

gehört zu

Vorderansicht
front view

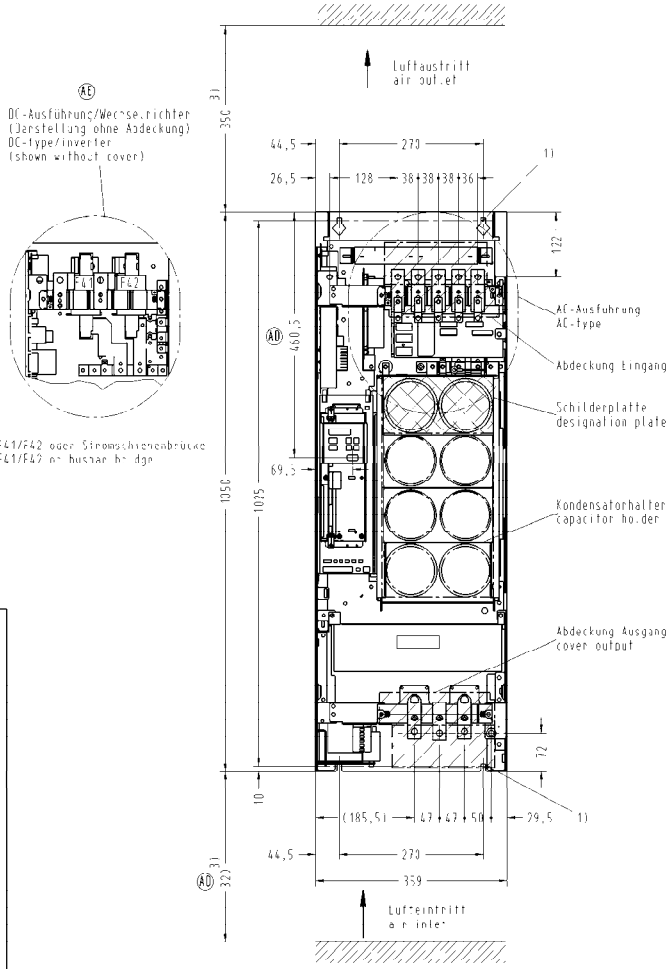

Seitenansicht links
side view left

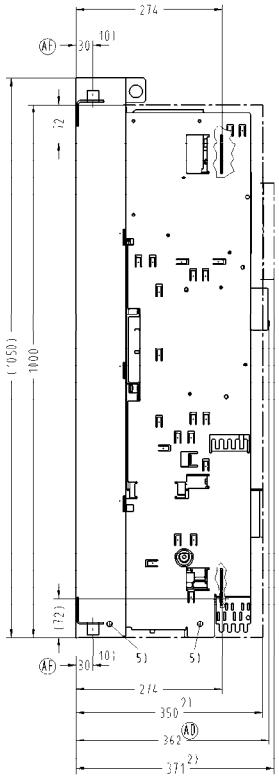

Vorderansicht mit Wasserkühlung (nur Basisblech und Anschlusswinkel)
front view with water cooling (only basic plate with connecting angle)

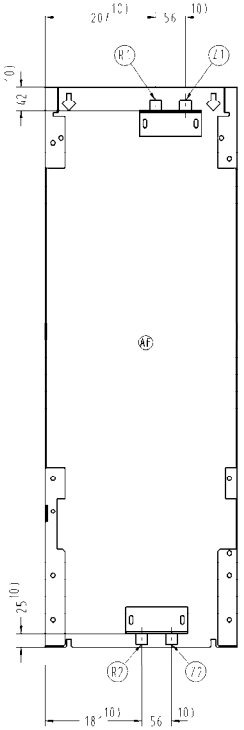

Vorderansicht IP20-Ausführung
front view IP20-design

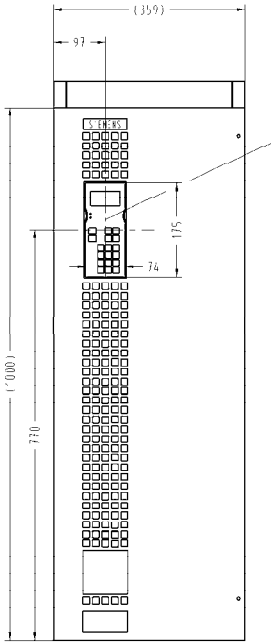

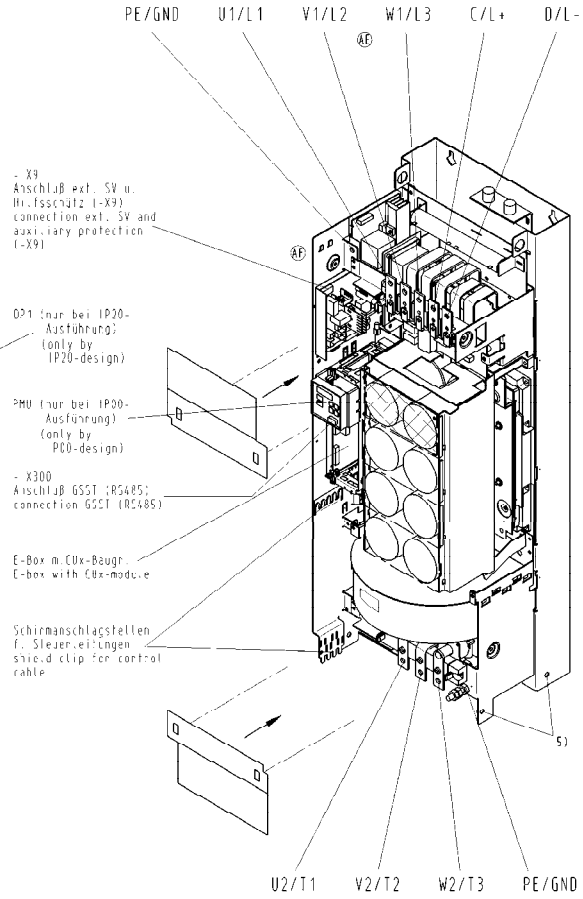

Zulauf, Anschlussmöglichkeit für Kühlwasserschlauch 1/2 Zoll
input, possible connection for cool water pipe 1/2 zoll

Rücklauf, Anschlussmöglichkeit für Kühlwasserschlauch 1/2 Zoll
output, possible connection for cool water pipe 1/2 zoll

(AF)

(R2) + (Z2) oder (R1) + (Z1) verschlossen je nach Anwendungsfall

(R2) + (Z2) or (R1) + (Z1) closed acc. to application

1) Schrank-/Wandbefestigung mit Schraube M8
Cabinet-/wall-mounting with screw M8

2) Schutzart IP20
Protection IP20

3) Luftraum für Kühlung
Space required for cooling

4) Gewicht / Weight: IP00 = 65kg / IP20 = 82kg

5) Nach Abnahme der Transportbleche sind hier Anschraubmöglichkeiten (M8) für Blechteile zur Schirmauflage der Motorleitungen./
After removing transport brackets, there are possibilities (M8) for mounting sheet metal parts for sheeld connection of motor cables.

(AF) 10)gilt für Wasserausführung
used by water cooling version

Maßblatt / Dimension drawing
Maße in mm / Dimensions in mm

Max. Umgebungstemp. = 40°C
Max. ambient temp. = 40°C

U1/V1/W1 nur bei AC-Ausführung
L1/L2/L3 only by AC-version

(AL) Geräuschpegel: 71 db A
Noise level: 71 db A

Anschlüsse U1/V1/W1/U2/V2/W2/C/D/PE1/PE2 ø11 (M10)
Anschlußquerschnitte bei IP00 max. 2x95mm²
IP20 max. 2x70mm²
(Querschnitt Stromschienen: AC/DC = 25x5mm)

Connection L1/L2/L3/T1/T2/T3/L+/L-/GND ø11 (M10)
Wire range by IP00 max. 2x95mm²
IP20 max. 2x70mm²
(cross section current bars: AC/DC = 25x5mm)

Achtung: Schwerpunktverlagerung
Attention: Displacement of the centre of gravity

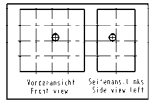

Cortlé à titre de secret d' entreprise. Tous droits réservés
Cortado como secreto industrial. Nos reservamos todos los derechos
Comunicado como segredo empresarial. Reservados todos os direitos
The reproduction or use of this document or its contents is not permitted without express written authority. Offenders will be liable for damages. All rights, including rights created by patent grant or registration of a utility model or design, are reserved.
Weitergabe sowie Vervielfältigung dieser Unterlage, Verwertung und Mitteilung ihres Inhalts nicht gestattet, soweit nicht ausdrücklich zugestanden. Zuwiderhandlungen verpflichten zu Schadensersatz. Alle Rechte vorbehalten, insbesondere für den Fall der Patenterteilung oder GM-Eintragung.

Angaben für Eisenbahn Technik
Stückzahl
Inhalt abw.

hierzu:

	Allg. Toleranz ISO 2768-mK Tolerierung ISO 8015	Oberfläche	Maßstab 1.5	kg/Stück 4)
			Baugröße / unit size F (6) 6SE70_ _ - _ _ F_ _	
			Datum 19.06.95	SIMOVERT MASTER DRIVES
			Bearb. Hagen	Chassis unit
			Gepr. S.ARTAS Syrbo	
A5	507615	21.10.99	Hag	Norm
A4	986717	30.10.98	Hag	Ers. durch ABD ML 245
A3	986187	15.07.98	Ma	
A2	904047	26.08.97	Ba	SIEMENS Aktiengesellschaft Erlangen FGB
A1	211961	12.08.96	Ba	
Zust.	Änderung	Datum	Name	Ersatz für/ersetzt durch

1SE.476 254.9000.00 MB AF

Blatt
Bl.

I-deas MS

CAD-Zeichnung
Manuelle Änderung nicht zulässig

gehört zu

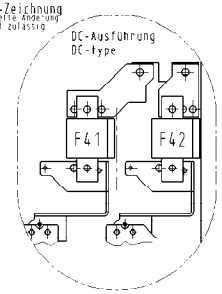

F41/F42 oder Stromschienenbrücke
F41/F42 or busbar brigde

Vorderansicht
front view

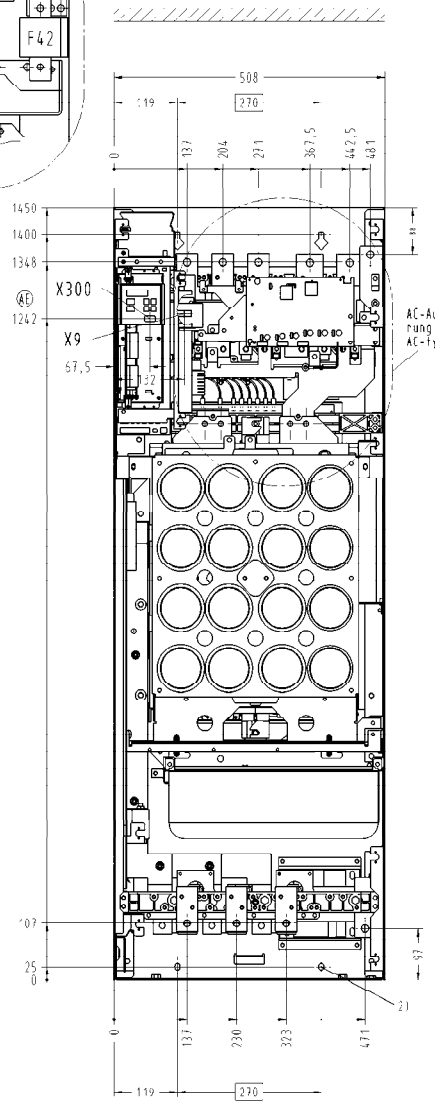

Seitenansicht links
side view left

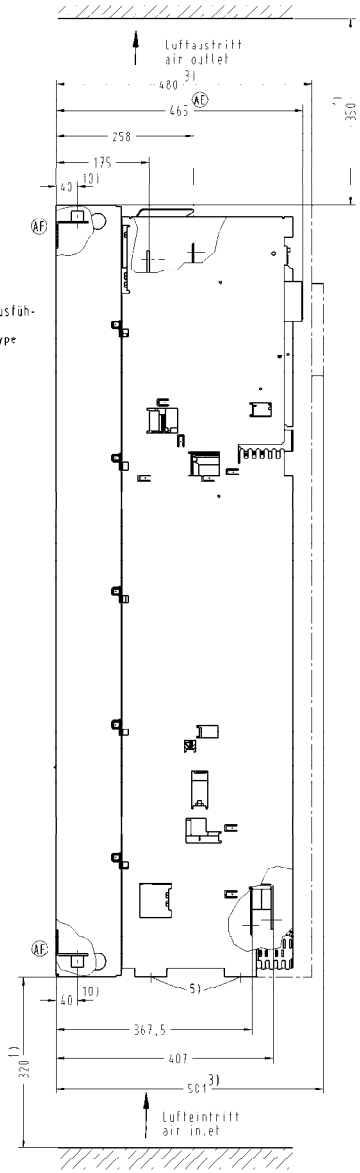

Vorderansicht
mit Wasserkühlung
(mit Anschlusswinkel)
front view with
water cooling
(with connecting angle)

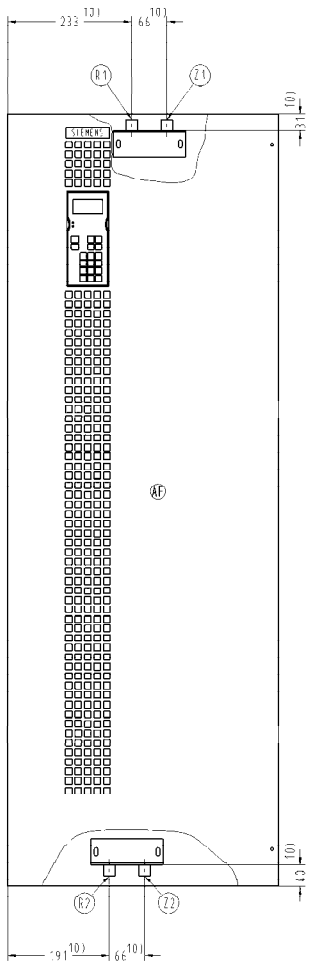

Vorderansicht IP20-Ausführung
front view IP20-design

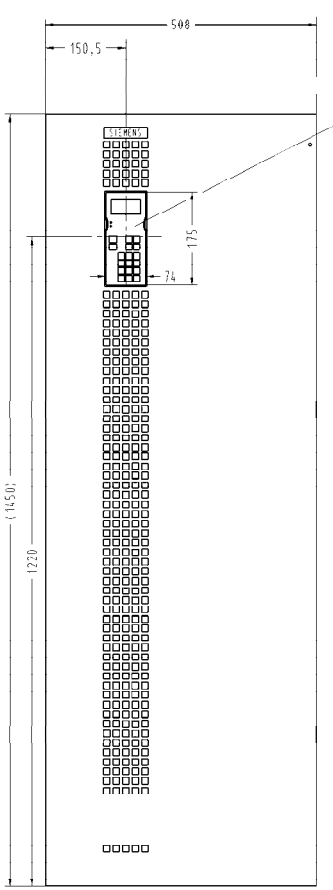

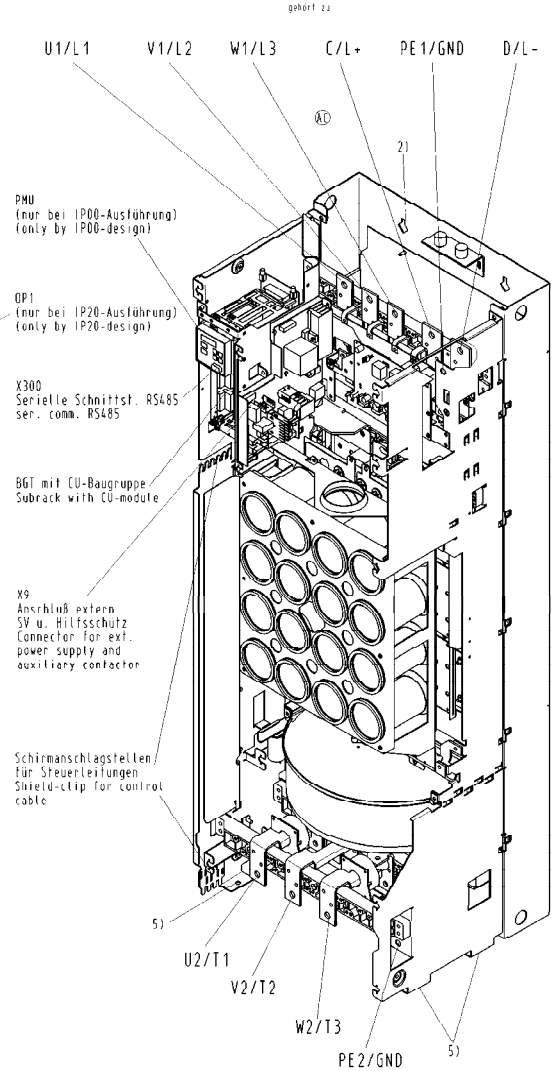

Maßblatt / Dimension drawing
Maße in mm / Dimension in mm

Max. Umgebungstemp. = 40°C
Max. ambient temp. = 40°C

U1/V1/W1 nur bei AC-Ausführung
L1/L2/L3 only by AC-version

(Z1) (Z2) = Zulauf, Anschlussmöglichkeit für Kühlwasserschlauch 3/4 Zoll
input, possible connection for cool water pipe 3/4 zoll

(R1) (R2) = Rücklauf, Anschlussmöglichkeit für Kühlwasserschlauch 3/4 Zoll
output, possible connection for cool water pipe 3/4 zoll

(AF)

(R2) + (Z2) oder (R1) + (Z1) verschlossen je nach Anwendungsfall
(R2) + (Z2) or (R1) + (Z1) closed acc. to application

Space required for cooling

2) Schrank-/Wandbef. mit Sechskantschr. M8
Cabinet-/wall-mount. with hexagon head screws M8

3) Schutzart IP20
Protection IP20

4) Gewicht / Weight:
IP00=155kg / IP20=186kg

5) Nach Abnahme der Transportbleche sind hier Anschraubmöglichkeiten (M8) für Blechteile zur Schirmauflage der Motorleitungen./
After removing transport brackets, there are possibilities (M8) for mounting sheet metal parts for sheeld connection of motor cables.

(AF) 10)gilt für Wasserausführung
used by water cooling version

(AC) Geräuschpegel: 81 db A
Noise level: 81 db A

Anschlüsse U1/V1/W1/U2/V2/W2/C/D/PE1/PE2 ø13,5 (M12)
Anschlußquerschnitte max. 2x150mm²
(Querschnitt Stromschienen: AC = 40x5mm
DC = 50x5mm)/
Connection L1/L2/L3/T1/T2/T3/L+/L-/GND ø13,5 (M12)
Wire range max. 2x150mm²
(cross section current bars: AC = 40x5mm
DC = 50x5mm)

Achtung: Schwerpunktverlagerung
Attention: Displacement of the centre of gravity

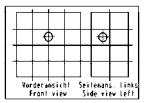

Confié à titre de secret d' entreprise. Tous droits réservés
Confiado como secreto industrial. Nos reservamos todos los derechos
Comunicado como segredo empresarial. Reservados todos os direitos
The reproduction or use of this document or its contents is not permitted without express written authority. Offenders will be liable for damages. All rights, including rights created by patent grant or registration of a utility model or design, are reserved.
Weitergabe sowie Vervielfältigung dieser Unterlage, Verwertung und Mitteilung ihres Inhalts nicht gestattet, soweit nicht ausdrücklich zugestanden. Zuwiderhandlungen verpflichten zu Schadenersatz. Alle Rechte vorbehalten, insbesondere für den Fall der Patenterteilung oder GM-Eintragung.

Angaben für Eilaufträg
Stückzahl
Termin
Inhalt ja/nein

hierzu:

	Allg. Toleranz ISO 2768-mK Tolerierung ISO 8015	Oberfläche	Maßstab 1:5	kg/Stück 4)	
			Baugröße / unit size G (7) 6SE70 - G		
		Datum 09.06.95	SIMOVERT Master Drives Chassis unit AC/DC		
		Bearb. Hagen			
		Gepr. S.ARIAS Sydbo			
A* 507615	22.10.99	Hag	Norm		
A: 986187	15.01.98	Mg	Ers. AGD ML 245		
A3 984042	16.09.97	Ba	SIEMENS Aktiengesellschaft Erlangen FGB	1SE.476256.9000.00 MB AF	Blatt
A2 984042	26.08.97	Ba			
A1 211961	12.08.96	Ba			
Zust. Änderung	Datum	Name	Ersatz für/ersetzt durch		

I-deas MS

CAD-Zeichnung
Handgefertigte Änderung nicht zulässig

gehört zu:

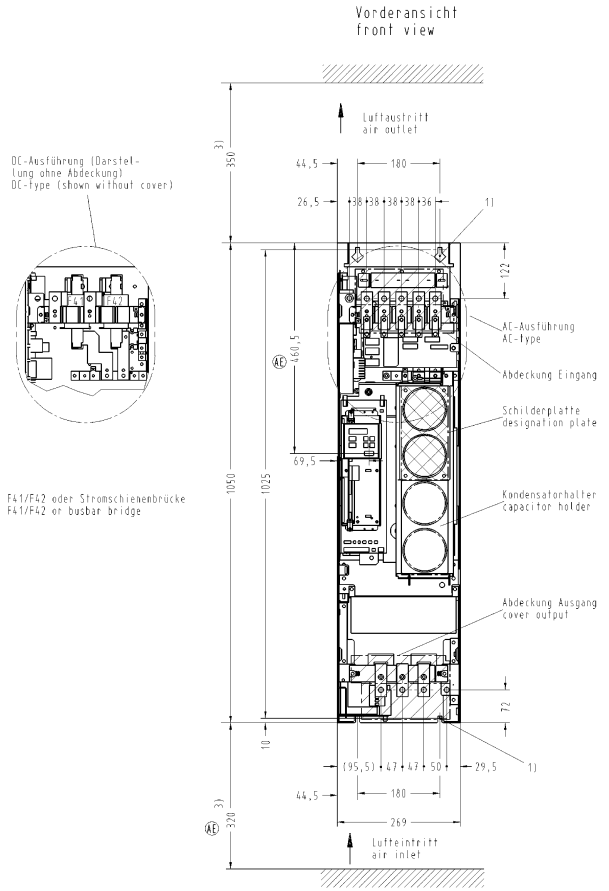

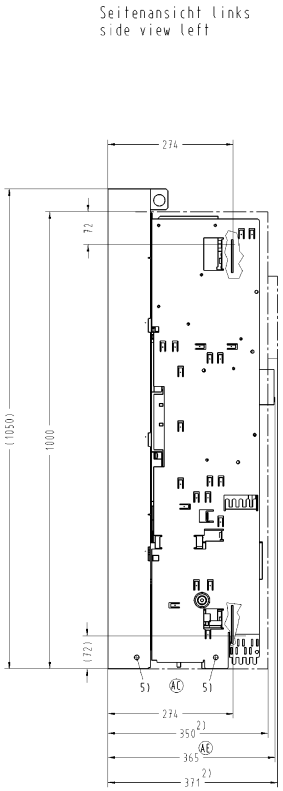

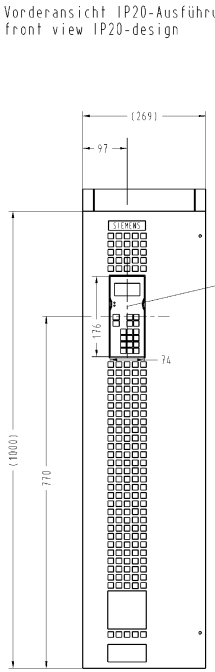

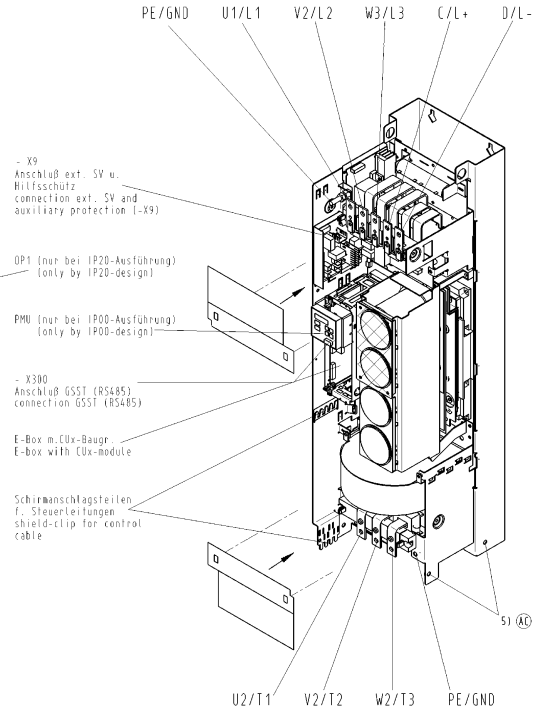

1) Schrank-/Wandbefestigung
mit Schraube M8
Cabinet-/wall-mounting
with screw M8

2) Schutzart IP20
Protection IP20

3) Luftraum für Kühlung
Space required for cooling

4) Gewicht / Weight: IP00 = 55kg / IP20 = 70kg

AC 5) Nach Abnahme der Transportbleche sind hier Anschraubmöglichkeiten (M8) für Blechteile zur Schirmauflage der Motorleitungen./
After removing transport brackets, there are possibilities (M8) for mounting sheet metal parts for sheeld connection of motor cables.

Maßblatt / Dimension drawing
Maße in mm / Dimension in mm

Max. Umgebungstemp. = 40°C
Max. ambient temp. = 40°C

U1/V1/W1 nur bei AC-Ausführung
L1/L2/L3 only by AC-version

AD Geräuschpegel: 71 db A
Noise level: 71 db A

Anschlüsse U1/V1/W1/U2/V2/W2/C/D/PE1/PE2 ø11 (M10)
Anschlußquerschnitte bei IP00 max. 2x95mm²
IP20 max. 2x70mm²
(Querschnitt der Stromschienen: AC/DC = 25x5 mm)
Connection L1/L2/L3/T1/T2/T3/L+/L-/GND ø11 (M10)
Wire range by IP00 max. 2x95mm²
IP20 max. 2x70mm²
(cross section of current bars: AC/DC = 25x5 mm)

Achtung: Schwerpunktverlagerung
Attention: Displacement of the centre of gravity

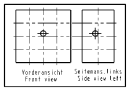

Contido á titro de secret d' enterprise. Tous droits réservés

Contiede como secreto industrial. Nos reservamos todos los derechos

Comunicado como segredo empresarial. Reservados todos os direitos

The reproduction or use of this document or its contents is not permitted without express written authority. Offenders will be liable for damages. All rights, including rights created by patent grant or registration of a utility model or design, are reserved.

Weitergabe sowie Vervielfältigung dieser Unterlage, Verwertung und Mitteilung ihres Inhalts nicht gestattet, soweit nicht ausdrücklich zugesichert. Zuwiderhandlungen verpflichten zu Schadensersatz. Alle Rechte vorbehalten, insbesondere für den Fall der Patenterteilung oder GM-Eintragung.

Ausgabe für Erstauftrag
Stückzahl / Typenbl. / Typbl. Jahrg.

hierzu:

				Datum	22.06.95
				Bearb.	Hentschel
				Gepr.	s.ANTIES-SYMBOL
				Norm	Recht
AC	996187	15.07.96	MQ	Abt.	PE D T3
AD	996042	26.08.97	Bä		
AC	211981	12.08.96	Bä		
AB	211842	29.02.96	Bä		
Zust.	Mitteilung	Datum	Name		

Allg. Toleranz ISO 2768-mK
Toleranzerg. ESD 4015
Oberfläche: -----

Maßstab: 1_5 kg/Stück 4)

Baugröße / unit size E (5)
6SE70_ _ _ - E_

SIMOVERT Master Drive
Chassis unit AC/DC
Typ 6SE70

SIEMENS
Bereich A&B 35/PS
Erlangen FÜB

1SE.476245.9000.00 MB AE

Blatt
Bl.

Ersatz für/ersetzt durch:

I-deas MS

• I-DEAS • 19.01.1998 Cc:21 cc chrangsverw.fung (zwei ... B:A) Master ser cs nach K110:

CAD-Zeichnung
Manuelle Änderung nicht zulässig

gehört zu:

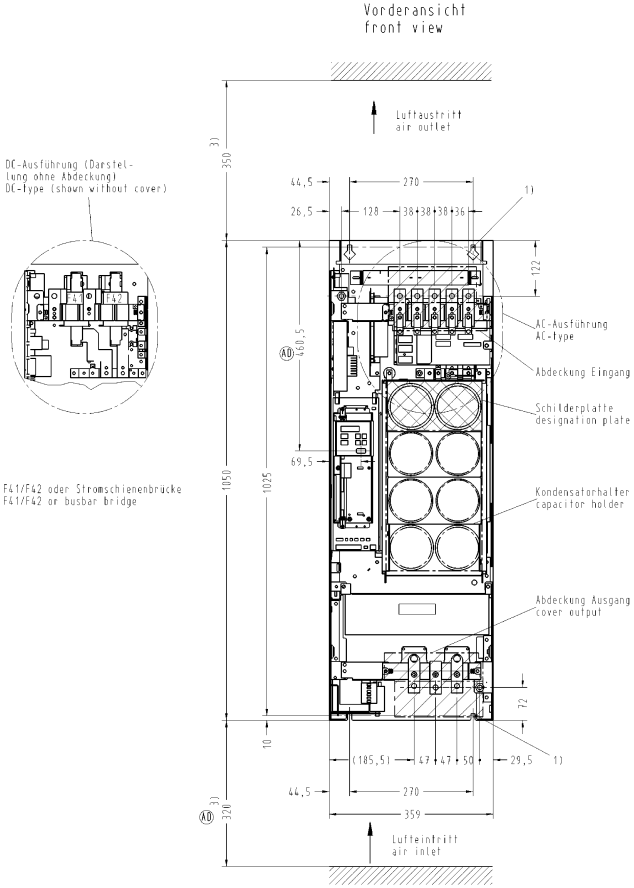

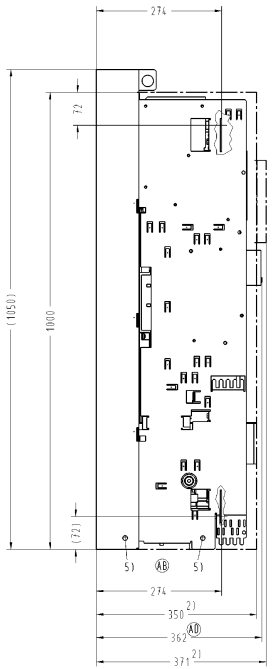

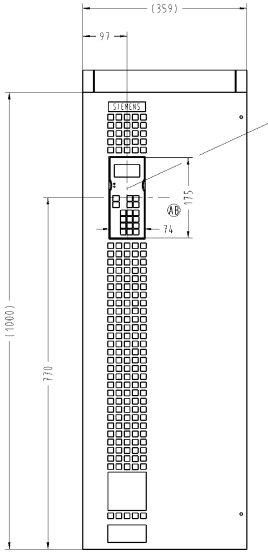

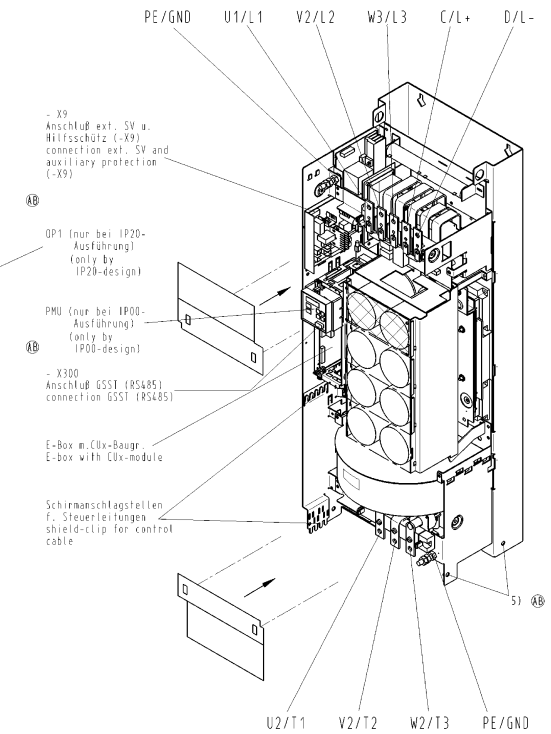

Maßblatt / Dimension drawing
Maße in mm / Dimensions in mm

Max. Umgebungstemp. = 40°C
Max. ambient temp. = 40°C

U1/V1/W1 nur bei AC-Ausführung
L1/L2/L3 only by AC-version

(AC) Geräuschpegel: 71 db A
Noise level: 71 db A

Anschlüsse U1/V1/W1/U2/V2/W2/C/D/PE1/PE2 ø11 (M10)
Anschlußquerschnitte bei IP00 max. 2x95mm²
IP20 max. 2x70mm²

(AB) (Querschnitt Stromschienen: AC/DC = 25x5mm)

Connection L1/L2/L3/T1/T2/T3/L+/L-/GND ø11 (M10)
Wire range by IP00 max. 2x95mm²
IP20 max. 2x70mm²

(AB) (cross section current bars: AC/DC = 25x5mm)

1) Schrank-/Wandbefestigung
mit Schraube M8
Cabinet-/wall-mounting
with screw M8

2) Schutzart IP20
Protection IP20

3) Luftraum für Kühlung
Space required for cooling

4) Gewicht / Weight: IP00 = 65kg / IP20 = 82kg

(AB) 5) Nach Abnahme der Transportbleche sind hier Anschraubmöglichkeiten (M8) für Blechteile zur Schirmauflage der Motorleitungen./
After removing transport brackets, there are possibilities (M8) for mounting sheet metal parts for sheeld connection of motor cables.

Achtung: Schwerpunktverlagerung
Attention: Displacement of the centre of gravity

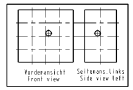

Confidential titre de secret d'entreprise. Tous droits réservés

Confiado como secreto industrial. Nos reservamos todos los derechos

Comunicado como segredo empresarial. Reservados todos os direitos

The reproduction or use of this document or its contents is not permitted without express written authority. Offenders will be liable for damages. All rights, including rights created by patent grant or registration of a utility model or design, are reserved.

Weitergabe sowie Vervielfältigung dieser Unterlage, Verwertung und Mitteilung ihres Inhalts nicht gestattet, soweit nicht ausdrücklich zugesichert. Zuwiderhandlungen verpflichten zu Schadensersatz. Alle Rechte vorbehalten, insbesondere für den Fall der Patenterteilung oder GM-Eintragung.

Ausgabe für Erstauftrag
Stückzahl / Termin
Typ/Stück Jahr

hierzu:

AD	906183	15.07.98	Mg		
AC	904042	26.08.97	Bä		
AB	211911	12.08.96	Bä		
Zust	Mitteilung	Datum	Name		

Allg. Toleranz: ISO 2768-mK
Tolerierung: ISO 8015

Oberfläche:

Datum	19.06.95
Bearb.	Hentschel
Gepr.	s.ARTIFS-SYMBOL
Norm	Hecht
Akt.	PE_D_T3

SIEMENS
Bereich A&D 35/PS
Erlangen FÜB

Maßstab: 1_5 kg/Stück 4)

Baugröße / unit size F (6)
6SE70_____F__

SIMOVERT MASTER DRIVES
Chassis unit AC/DC
Typ 6SE70

1SE.476 254.9000.00 MB AD

Blatt
Bl.

Ersatz für/ersetzt durch

CAD-Zeichnung
Manuelle Änderung nicht zulässig

gehört zu:

Vorderansicht
front view

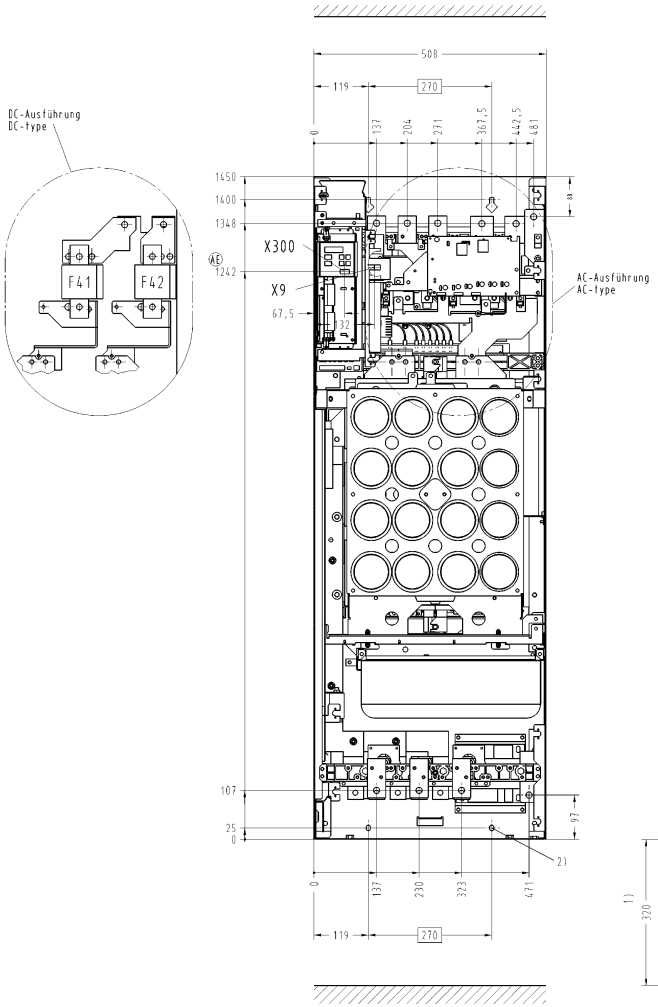

Seitenansicht links
side view left

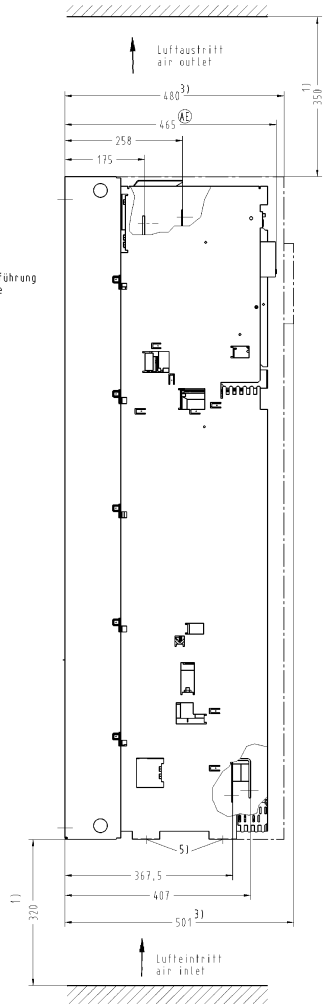

Vorderansicht IP20-Ausführung
front view IP20-design

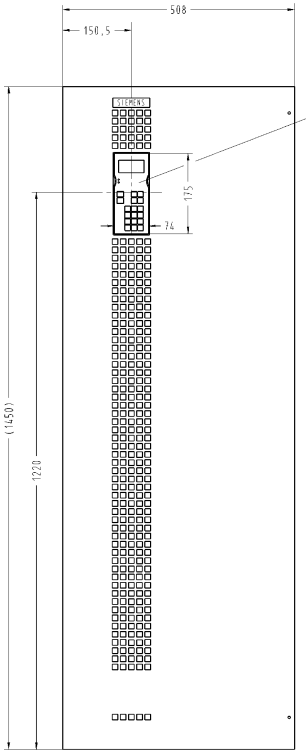

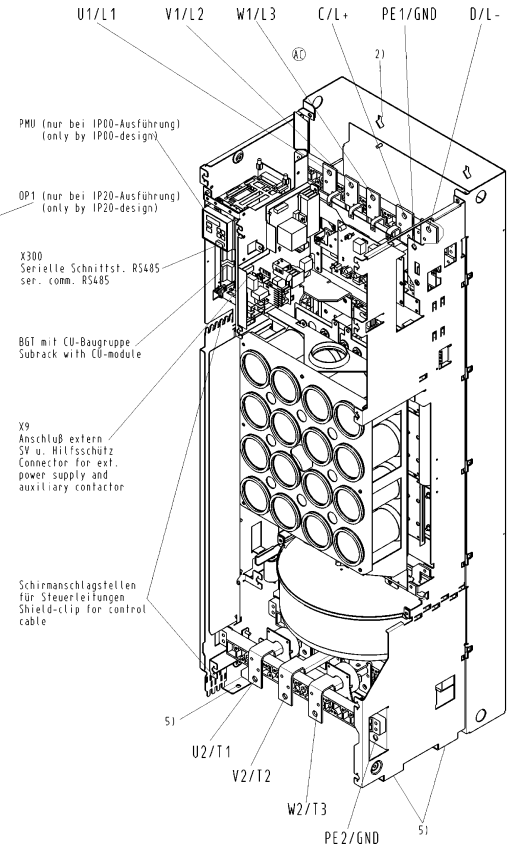

Maßblatt / Dimension drawing
Maße in mm / Dimension in mm

Max. Umgebungstemp. = 40°C
Max. ambient temp. = 40°C

U1/V1/W1 nur bei AC-Ausführung
L1/L2/L3 only by AC-version

AC Geräuschpegel: 81 db A
Noise level: 81 db A

Anschlüsse U1/V1/W1/U2/V2/W2/C/D/PE1/PE2 Ø13,5 (M12)
Anschlußquerschnitte max. 2x150mm²
(Querschnitt Stromschienen: AC = 40x5mm
DC = 50x5mm)/
Connection L1/L2/L3/T1/T2/T3/L+/L-/GND Ø13,5 (M12)
Wire range max. 2x150mm²
(cross section current bars: AC = 40x5mm
DC = 50x5mm)

Achtung: Schwerpunktverlagerung
Attention: Displacement of the centre of gravity

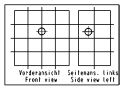

1) Luftraum für Kühlung
Space required for cooling

2) Schrank-/Wandbef. mit Sechskantschr. M8
Cabinet-/wall-mount. with hexagon head screws M8

3) Schutzart IP20
Protection IP20

4) Gewicht / Weight:
IP00=155kg / IP20=186kg

5) Nach Abnahme der Transportbleche sind hier Anschraubmöglichkeiten (M8) für Blechteile zur Schirmauflage der Motorleitungen./
After removing transport brackets, there are possibilities (M8) for mounting sheet metal parts for sheeld connection of motor cables.

Confidé à titre de secret d' entreprise. Tous droits réservés

Confiado como secreto industrial. Nos reservamos todos los derechos

Comunicado como segredo empresarial. Reservados todos os direitos

The reproduction or use of this document or its contents is not permitted without express written authority. Offenders will be liable for damages. All rights, including rights created by patent grant or registration of a utility model or design, are reserved.

Weitergabe sowie Vervielfältigung dieser Unterlage, Verwertung und Mitteilung ihres Inhalts nicht gestattet, soweit nicht ausdrücklich zugesichert. Zuwiderhandlungen verpflichten zu Schadensersatz. Alle Rechte vorbehalten, insbesondere für den Fall der Patenterteilung oder GM-Eintragung.

Ausgaben für Erstauftrag
Stückzahl / Variant:
Typ/Lfd.Jahr

hierzu:

				Datum	09.06.95
				Bearb.	Hentschel
				Gepr.	s.ANTIFS-SYMBOL
				Norm	Hecht
AE	906187	15.07.96	MG	Abt.	PE D 13
AD	904042	26.09.97	Ba		
AC	904042	26.08.97	Ba		
AB	211931	12.08.96	Ba		
Zust	Mitteilung	Datum	Name		

Allg. Toleranz
ISO 2768-mK
Tolerierung
ISO 8015

Oberfläche:

SIEMENS
Bereich A&D MS/PS
Erlangen FÜB

Maßstab: 1_5 kg/Stück 4)

Baugröße / unit size G (7)
6SE70_ _ _ _G_

SIMOVERT Master Drives
Chassis unit AC/DC
Typ 6SE70

1SE.476256.9000.00 MB AE

Blatt
Bl.

Ersatz für/ersetzt durch

I-deas MS

• I-DEAS • 19.01.1998 Cc.31 cc Entwicklungsverwaltung (zzwt ... B/A) Master 3er cs nach KVIU

CAD-Zeichnung
Manuelle Änderung nicht zulässig

gehört zu:

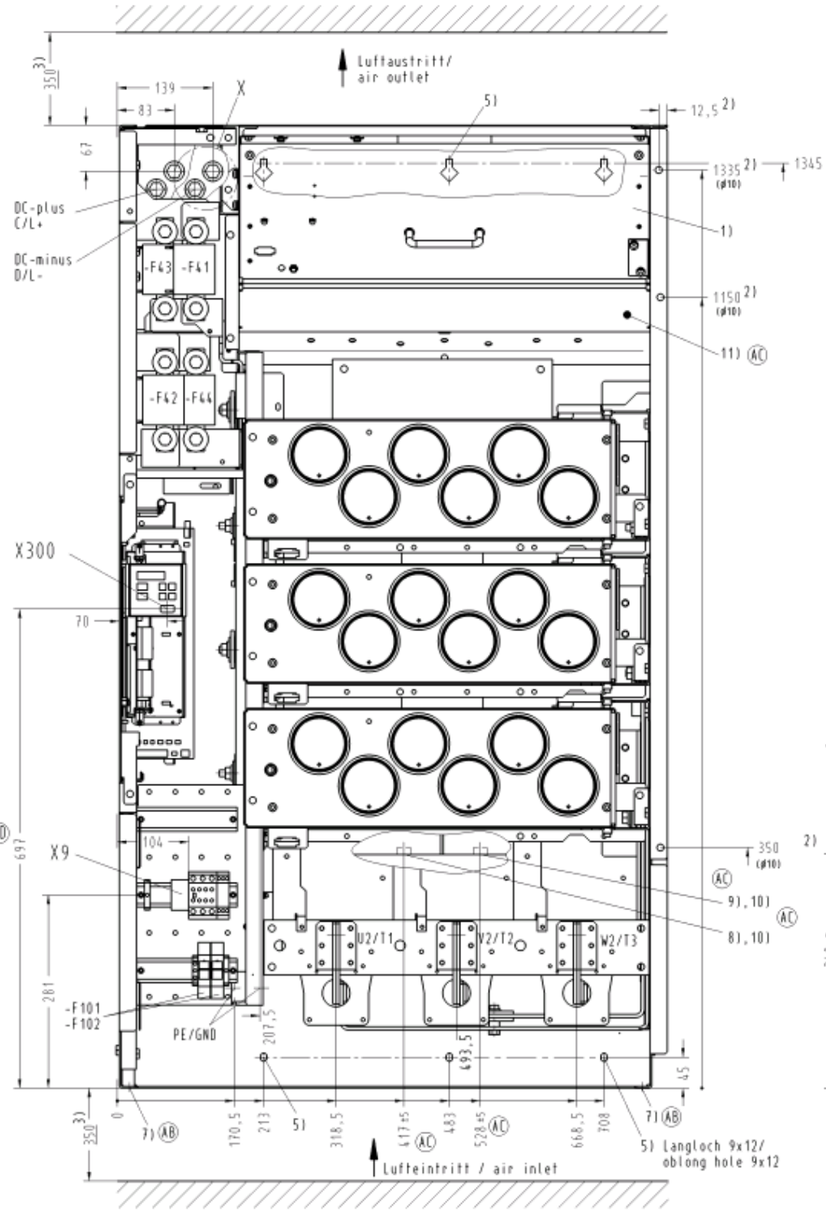

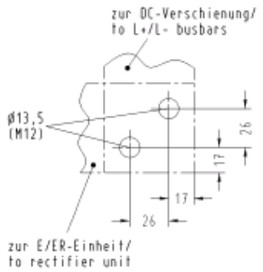

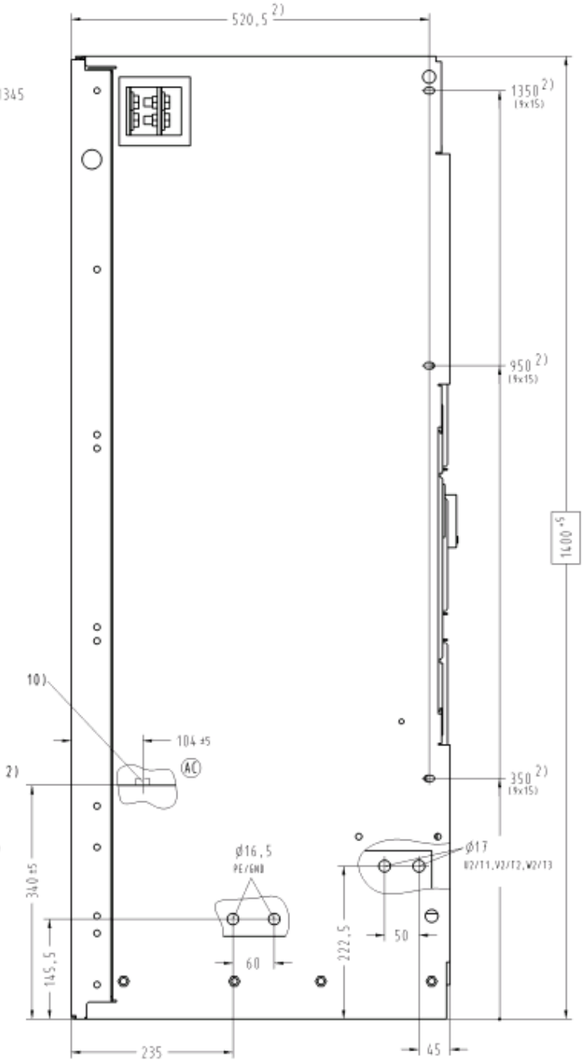

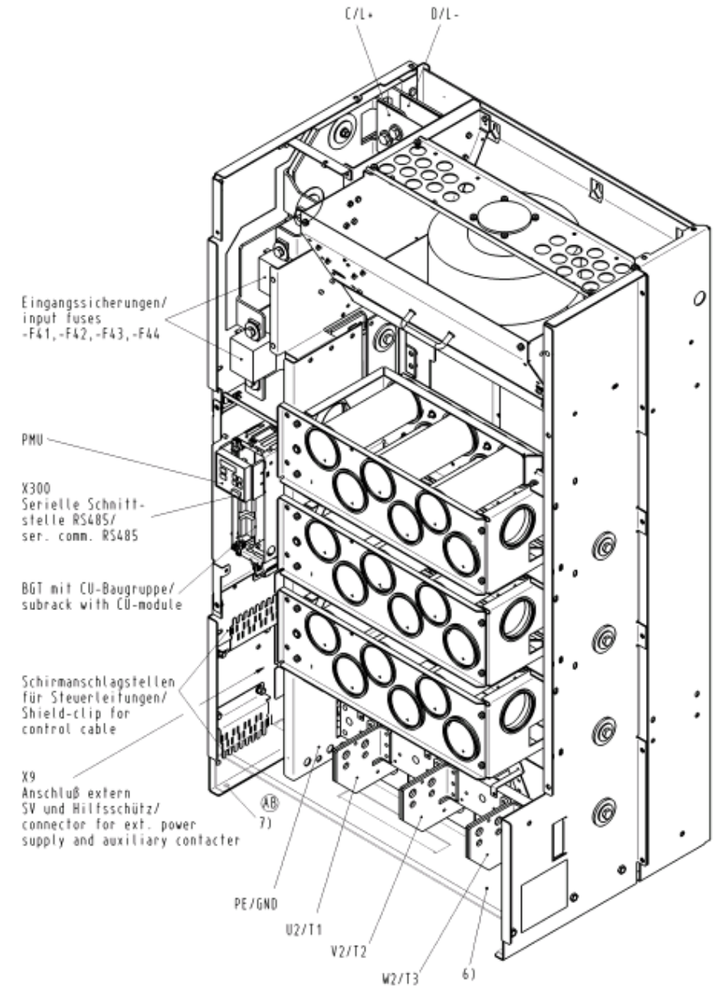

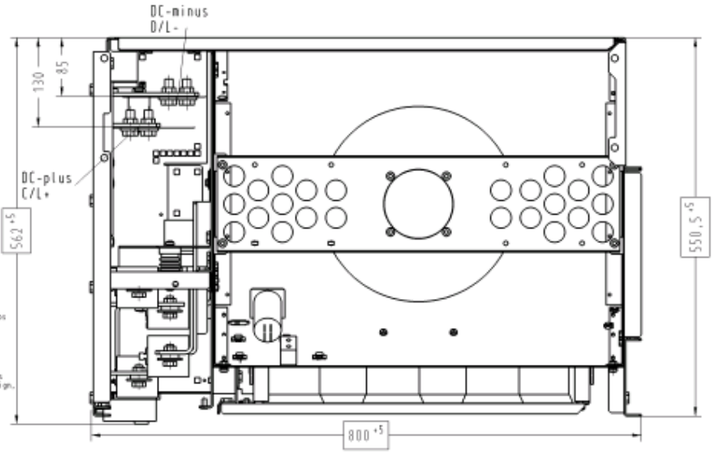

8) Wasserkühlung - Vorlauf/
watercooling inlet

9) Wasserkühlung - Rücklauf/
watercooling outlet (return flow)

10) Bei Wasserkühlung, Anschluß
für Kühlkreislauf direkt am
Kühlkörper - 1"Innengewinde (R1")/
If watercooled units the connections
for cooling circulation are on the
heatsink 1"internal thread (R1")

11) Entlüftung bei Wasserkühlung/
deaeration for watercooled unit

1) Lüftereinschub muß zur
Gerätemontage demontiert werden/
ventilator unit must be removed before
the chassis is to be mounted in a housing

2) zusätzliche Befestigungsmöglichkeit
des Chassis im vorderen Bereich (z.B. am
Schrankholm)/
additional holes for mounting in the front
(e.g. on cubicle frame)

3) Luftraum für Kühlung
ACHTUNG:
Beim Einbau des Chassis beachten,
daß kein Kurzschluß im Luftstrom entsteht!/
space required for cooling
NOTE:
By mounting the chassis into a housing
watch that there is no short-circuit
of air-stream!

4) Gewicht: Netto ca. 350kg
Mit Transportteile ca.370kg/
Weight: net weight app. 350kg
with transport parts app. 370kg

5) Schrank-/Wandbefestigung mit Sechskantschrauben M8/M10/
cabinet-/wall-mounting with hexagon head screws M8/M10

7) Nach Abnahme der Transportbleche sind hier
Anschraubmöglichkeiten (ø12) für Blechteile zur
Schirmauflage der Motorleitungen./
After removing transport brackets, there are
possibilities (ø12) for mounting sheet metal parts
for sheeld connection of motor cables.

6) Transportbleche:

- Tragblech zum Einbau in Schrank
  mittels Gabelstapler.
- ACHTUNG:
  Tragblech nach Einbau entfernen
- HINWEIS:
  Tragblech wird unter Umständen für
  späteren Aus-/ Einbau wieder benötigt!/

Transport parts:

- transport parts for moving the
  chassis unit in a cabinet with a
  fork lift truck
- ATTENTION:
  remove transport part after mounting
- Note:
  for perhaps later removing the chassis unit,
  the transport part needed also.

Achtung: Schwerpunktverlagerung
Attention: Displacement of the
centre of gravity

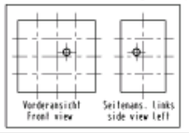

- Maßblatt / Dimension drawing
  Maße in mm / Dimension in mm

- Darstellung ohne Abdeckungen/
  view without covers

- Max. Umgebungstemp. = 40°C/
  max. ambient temp. = 40°C

- Anschlüsse C/D ø13,5 (M12) (siehe Einzelheit X)
  U2/V2/W2 ø17 (M16) (max. 4x300mm² oder Strom-
  schiene 90 x 5mm)
  PE ø16,3 (M16) (max. 4x300mm² oder Strom-
  schiene 90 x 5mm)/
  ø12,7 (M12) (max. 4x300mm² oder Strom-
  schiene 90 x 5mm)
  connection L+/L- ø13,5 (M12) (see detail X)
  T1/T2/T3 ø17 (M16) (max. 4x300mm² or busbar
  90 x 5mm)
  GND ø16,3 (M16) (max. 4x300mm² or busbar
  90 x 5mm)
  ø12,7 (M12) (max. 4x300mm² or busbar
  90 x 5mm)

- Geräuschpegel: 80 db A/
  noice level: 80 db A

Confié à titre de secret d' enterprise. Tous droits réservés

Cedido como secreto industrial. Nos reservamos todos los derechos

Comunicado como segredo empresarial. Reservados todos os direitos

The reproduction or use of this document or its contents is not permitted without express written authority. Offenders will be liable for damages. All rights, including rights created by patent grant or registration of a utility model or design, are reserved.

Weitergabe sowie Vervielfältigung dieser Unterlage, Verwertung und Mitteilung ihres Inhalts nicht gestattet, soweit nicht ausdrücklich zugestanden. Zuwiderhandlungen verpflichten zu Schadenersatz. Alle Rechte vorbehalten, insbesondere für den Fall der Patenterteilung oder GM-Eintragung.

Angaben für Erstfertigung
Stückzahl: Termin:
Blatt/Blätter

hierzu:

	Allg. Toleranz ISO 2768-mK Toleranzeng ISO 8015	Oberfläche:		Maßstab: --	kg/Stück 4)
			Datum 03.07.96	Baugröße / unit size J (9) 6SE70__-__J__	
			Bearb. Beutschel	SIMOVERT Master Drives Chassis unit DC	
			Gepr. s.ARTUS-Symbol		
			Norm	Typ: 6SE70	
			Ant. A PE D T3		
AD	906187	15.07.98	Mü	SIEMENS Bereich ASD BS/PS Erlangen FBH	1SE. 476 233.9100.00 MB AD
AC	904042	28.08.97	Bö		
AB	211981	12.08.96	Bö		
Dat.	Mitteilung	Datum	Name		Ersatz für/ersetzt durch:

Blatt 01

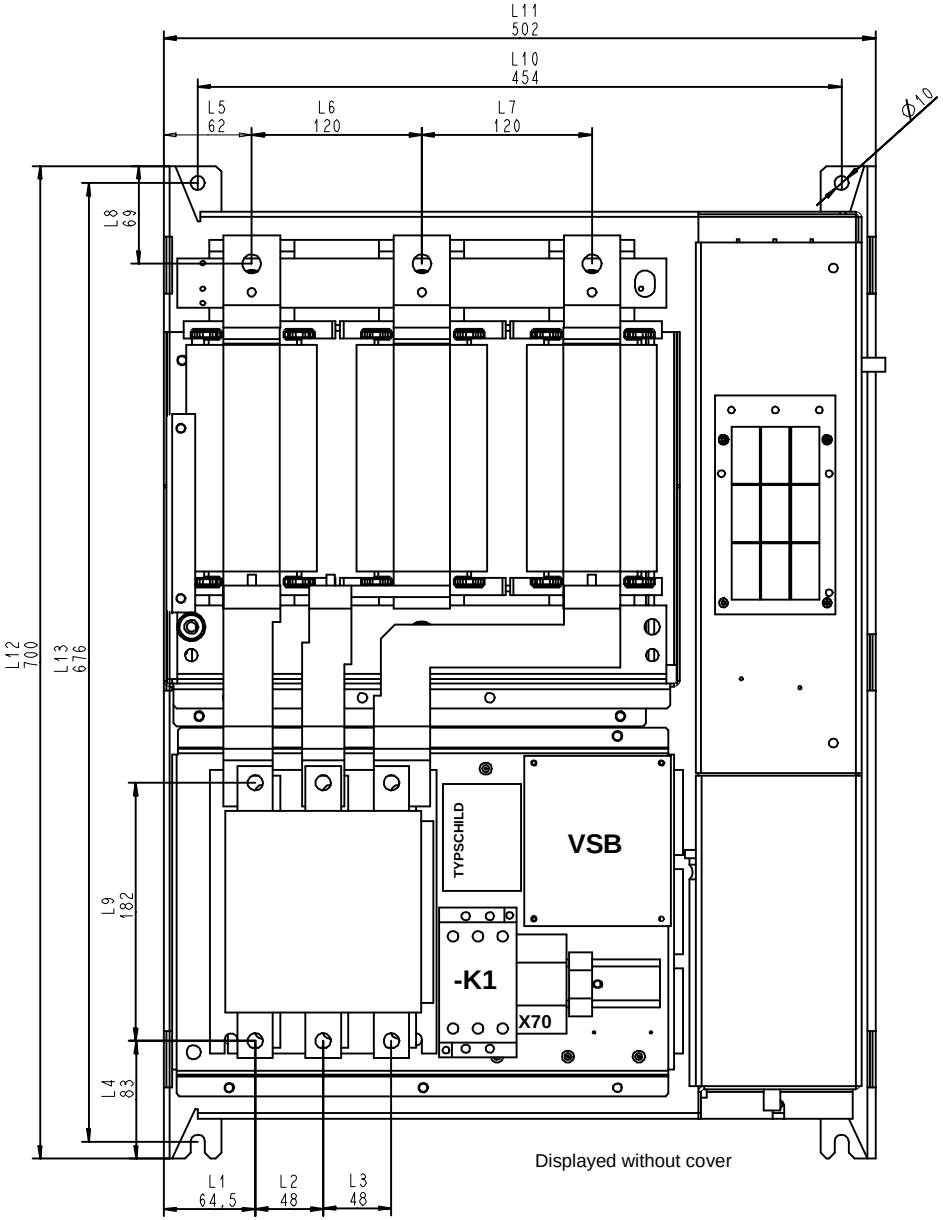

Displayed without cover

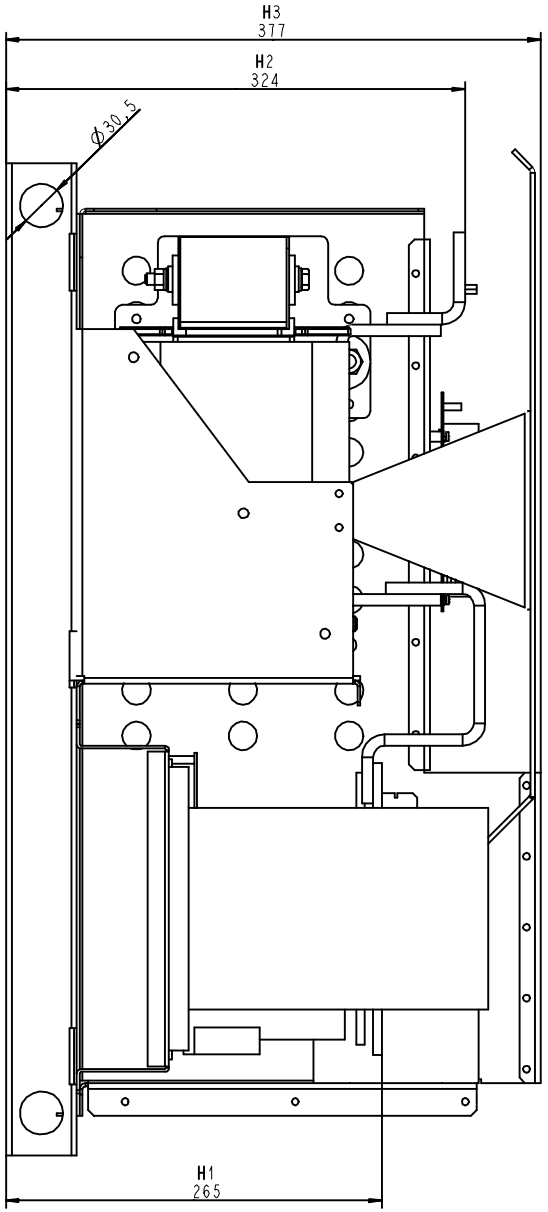

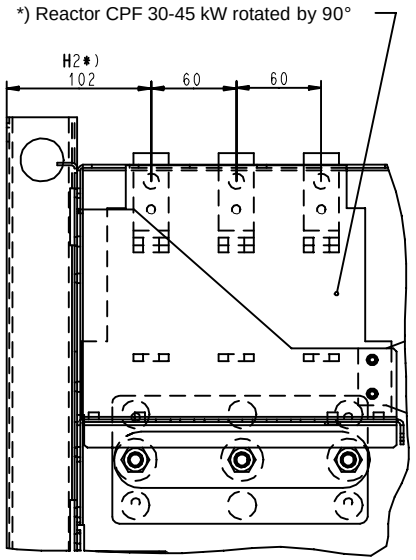

Display CPF 45 kW / 92 A
M: 2:5

AFE-Variante	L1	L2	L3	L4	L5	L6	L7	L8	L9	L10	L11	L12	L13	H1	H2	H3
45kw / 92A	19	22,5	22,5	124	161	-	-	45	100	195	243	600	576	220	102	396
55kW / 124A	61	22,5	22,5	121	74,5	76	76	112	100	391	439	700	676	220	252	377
75-90kW / 146-186A	33	37	37	121	62,5	88	88	108	140	391	439	700	676	222	304	377
110kW / 210A	69,5	48	48	90	105	88	88	140	168	454	502	700	676	247	282	377
132kW / 260A	69,5	48	48	90	85	100	100	105	168	454	502	700	676	253	282	377
160kW / 315A	69,5	48	48	90	82	100	100	103	168	454	502	700	676	253	311,8	377
200kW / 370A	64,5	48	48	83	62	120	120	69	182	454	502	700	676	265	325,3	377
315kW / 560A	64,5	48	48	83	62	120	120	69	182	454	502	700	676	265	325,3	377

Mounting dimensions

CleanPower filter with basic mains module 45-315kW
Fastening with 4x M8 bolts
AFE variant shown:315kW (590A)

M 2:5

The following editions have been published so far:

Edition	Internal Item Number
AB	A5E00243916
AC	A5E00243916
AD	A5E00243916

Version AD consists of the following chapters:

Chapter		Changes	Pages	Version date
1	Definitions and Warnings	reviewed edition	4	06.2005
2	Description	reviewed edition	3	06.2005
3	Initial Start-Up	first edition	2	01.2004
4	Transport, Storage, Unpacking	reviewed edition	4	06.2005
5	Installation	reviewed edition	14	04.2006
6	Installation in Conformance with EMC Regulations	first edition	1	01.2004
7	Connecting-Up and Wiring	reviewed edition	20	04.2006
8	Basic Function Check	reviewed edition	4	06.2005
9	Explanation of Terminology and Functionality of the AFE	first edition	2	01.2004
10	Function Diagrams	first edition	2	01.2004
11	Parameterization	reviewed edition	10	06.2005
12	Parameter List	first edition	40	01.2004
13	Control and Status Words	first edition	21	01.2004
14	Faults and Alarms	reviewed edition	8	06.2005
15	Maintenance	reviewed edition	8	04.2006
16	Forming	reviewed edition	2	06.2005
17	Technical Data	reviewed edition	10	06.2005
18	Environmental Friendliness	first edition	1	01.2004
19	Appendix	reviewed edition	15	06.2005

We reserve the right to make changes to functions, technical data, standards, drawings and parameters.

The reproduction, transmission or use of this document or its contents is not permitted without express written authority. Offenders will be liable for damages. All rights, including rights created by patent grant or registration of a utility model or design, are reserved.

We have checked the contents of this document to ensure that they coincide with the described hardware and software. However, differences cannot be completely excluded, so that we do not accept any guarantee for complete conformance. However, the information in this document is regularly checked and necessary corrections will be included in subsequent editions. We are grateful for any recommendations for improvement.

SIMOVERT® Registered Trade Mark

Siemens AG
Automation and Drives
Motion Control Systems
P.O. Box 3180, D – 91050 Erlangen
Germany

www.siemens.com/motioncontrol

© Siemens AG 2006
Subject to change without prior notice
Order No.: 6SE7087-6CX86-2BA1

Printed in Germany