Apter Power

# I/A Series® HARDWARE
## Product Specifications

invensys
Foxboro®

**PSS 21H-2Y10 B4**

## FCM100Et Redundant Fieldbus Communications Module

*The Redundant Fieldbus Communications Module (FCM100Et) provides the communication interface between DIN rail mounted Fieldbus Modules (FBMs) and the Z-Module Control Processor 270 (ZCP270) over The MESH control network.*

## FEATURES

- Redundant modules use Master (controlling the process)/Tracker (monitoring the process) operation
- Automatic Master/Tracker role reversal on detected failures
- Interfaces The MESH control network (100 Mbps) to the HDLC Module Fieldbus (2 Mbps) for FBMs
- Optional GPS time strobe to synchronize Transient Data Recorder (TDR)/Transient Data Analysis (TDA) and Sequence Of Events (SOE) FBMs to within 1 ms
- Direct multi mode fiber optic connection to The MESH control network
- Soft letterbug entered by I/A Series® Letterbug Configurator
- Harsh (Class G3 - ISA S71.04) contamination protection.

- Monitored by standard I/A Series System Management displays
- Use of FCM100Ets allows ZCP270 to host up to 128 FBMs.

## OVERVIEW

The FCM100Et communicates via a high-speed 100 Mbps network to the I/A Series ZCP270. The FCM100Et module interfaces HDLC protocol (2 Mbps), used by the FBMs, to fiber optic Ethernet signals (100 Mbps), and vice versa.

FCM100Et and FBM modules install in a DIN rail mounted Modular Baseplate for high speed communication to/from the FBM and FCM100Et modules (see Figure 1). A pair of FCM100Et modules is installed to provide redundancy at the Fieldbus Module (FBM) level. One FCM100Et is the Master, and the other is the Tracker module. At any one time the Master module is active and the Tracker module is monitoring. Role switching is automatic if problems are detected, or the user can switch the roles at any time via System Management software.

Signal transmission distances up to 2 km (1.24 mi) are possible between FCM100Et modules and the Ethernet switches, providing for wide distribution of the FBM equipment groupings. For more information, refer to *The MESH Control Network Architecture* (PSS 21H-7C2 B3).

A pair of FCM100Et modules must be used for each FBM grouping. An FBM grouping can contain up to 32 FBMs.

Redundant FCM100Ets can be connected to The MESH control network, to a separate 100 Mbps fast Ethernet network or directly to a ZCP270. TDR/TDA and SOE are supported only on The MESH control network.

Apter Power

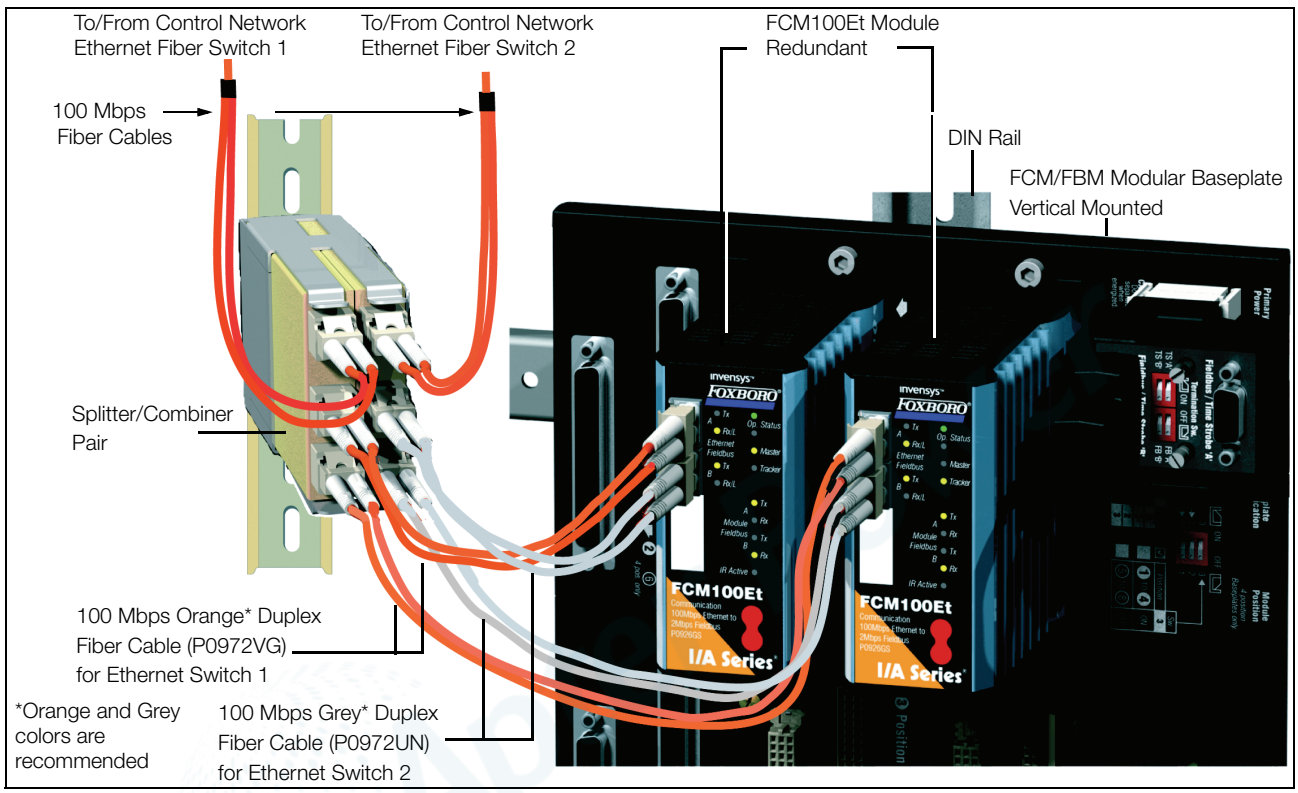


*Figure 1. Redundant FCM100Et Module on DIN Rail Mounted Modular Baseplate*

## FCM100Et MODULE DESIGN

FCM100Et modules have a compact design, with a rugged extruded aluminum exterior for physical protection of the electronics. Enclosures specially designed for mounting of the FBMs and FCMs provide various levels of environmental protection for the FCM100Et modules, up to harsh environments per ISA Standard S71.04.

The FCM100Et can be removed/replaced from the baseplate without removing power. Light-emitting diodes (LEDs) incorporated into the front of the FCM100Et indicate communications activity and module status.

## SPLITTER/COMBINER

Redundant FCM100Et modules connect to two fiber optic splitter/combiners that connect to Ethernet switches in a high speed Ethernet network (100 Mbps) (see Figure 1). Each splitter/combiner connects redundant Ethernet ports on the front of each module to redundant Ethernet switches in the control network.

For each module, the splitter/combiners provide separate transmit/receive fiber connections for each Ethernet Fieldbus port. Fiber cables are connected so that splitter/combiners pass inbound traffic to both modules, and pass outbound traffic from the Master module.

Each splitter/combiner pair mounts either in a chassis assembly for 19-inch racks or fastens to the DIN rail in the enclosure. The splitter/combiner is a passive optical device that does not require electrical power.

## HIGH RELIABILITY

The redundancy of the module pair, coupled with the high coverage of faults, provides very high subsystem availability time.

Either module may be replaced without upsetting input or output communications to the other module. A module can be removed or replaced without removing power.

## MODULAR BASEPLATE MOUNTING

The FCM100Et mounts on various types of Modular Baseplates, which accommodate different quantities and types of modules: just FCM100Ets, or a combination of FCM100Ets and FBMs. The Modular Baseplate is DIN rail mounted. The Modular Baseplate includes signal connectors for the FBMs, redundant independent dc power connections, I/O cable connections, Module Fieldbus HDLC (2 Mbps) connections and time synchronization connections.

Redundant modules must be located in an odd slot and adjacent even slot on the baseplate (positions 1 and 2, 3 and 4, 5 and 6, or 7 and 8).

For more information on the various types of baseplates in an I/A Series system, refer to *DIN Rail Mounted Modular Baseplates* (PSS 21H-2W6 B4).

## ETHERNET FIELDBUS COMMUNICATION

Communication with the host control station is via a 100 Mbps network. The FCM100Et accepts communication from either Ethernet port of the redundant switched fast Ethernet - should one path fail, the module continues communication over the other path.

## MODULE FIELDBUS COMMUNICATION

An HDLC (2 Mbps) serial A and B bus interconnects all baseplate-mounted modules (FBMs, FCMs and FCPs). All modules can receive/transmit messages over both busses.

## ENHANCED COMMUNICATIONS

The architecture uses 100 Mbps data communications between the FCM100Ets and ZCP270s (see Figure 2). Redundant FCM100Ets can be connected to The MESH control network, to a separate 100 Mbps fast Ethernet network or directly to a ZCP270. The network uses fiber optic cabling to provide extended distance and immunity to electromagnetic interference over that distance. The use of Fast Ethernet switches provides performance and cost savings over other network solutions.

## OPTIONAL TIME SYNCHRONIZATION

The I/A Series system supports time synchronization using either an externally maintained optional source of Universal Coordinated Time (UTC) from GPS satellites or an internal source using proprietary software. Using the external source, time synchronization of TDR/TDA and SOE FBMs is within 1 ms.

If a system contains ZCP270s and FCM100Ets, both the FCM100Ets and the ZCP270s must be supplied a time strobe to synchronize the TDR/TDA and SOE FBMs. The FCM100Et sends time messages to the FBMs under its control.

SOE data are discrete points that are time stamped at the FBM, optionally to 1 ms accuracy, and sent to the workstation on a change basis. TDR/TDA data are analog points that are time stamped and sent to the workstation every 10 ms. Both of these features are supported by client software in the workstation.

For more information refer to:

- *Time Synchronization Overview* (PSS 21S-1C2 B3).
- *Transient Data Recorder and Transient Data Analysis* (PSS 21S-2B10 B4).
- *Sequence of Events* (PSS 21S-2B9 B4).

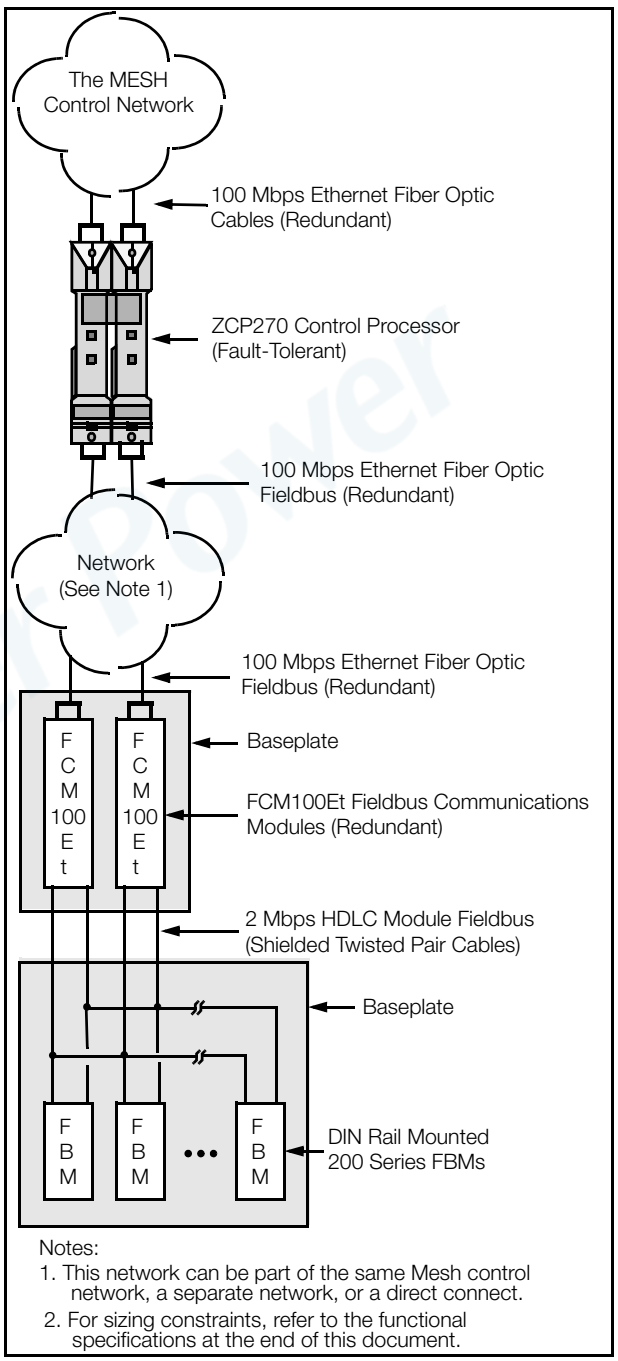


*Figure 2. Typical FCM100Et Network Configuration (Simplified)*

## FUNCTIONAL SPECIFICATIONS

### Process I/O Communications

**MODULE FIELDBUS COMMUNICATIONS**
Type - HDLC
Transmission Rate - 2 Mbps

**ETHERNET FIELDBUS COMMUNICATIONS**
Transmission Rate -100 Mbps

### Process I/O Capacity

Fieldbus Modules per FCM100Et; 32 maximum - depending on control processor sizing constraints (refer to *ZCP270 Sizing Guidelines* (B0700AW).)

### Infrared Communications

Letterbug assignment via I/A Series Letterbug Configurator. Letterbug or Hardware ID readout via I/A Series Letterbug Configurator.

### Power Requirements

**INPUT VOLTAGE RANGE**
24 V dc +5%, -10%

**CONSUMPTION**
7 W (maximum) at 24 V dc

### Regulatory Compliance

**ELECTROMAGNETIC COMPATIBILITY (EMC)**

*European EMC Directive 89/336/EEC*
Meets: EN 50081-2 Emission standard
EN 50082-2 Immunity standard
EN 61326 Annex A (Industrial Levels)

*CISPR 11, Industrial Scientific and Medical (ISM) Radio-frequency Equipment - Electromagnetic Disturbance Characteristics - Limits and Methods of Measurement*
Meets: Class A Limits

*IEC 61000-4-2 ESD Immunity*
Contact 4 kV, air 8 kV

*IEC 61000-4-3 Radiated Field Immunity*
10 V/m at 80 to 1000 MHz

*IEC 61000-4-4 Electrical Fast Transient/Burst Immunity*
2 kV on I/O, dc power and communication lines

*IEC 61000-4-5 Surge Immunity*
2kV on ac and dc power lines; 1kV on I/O and communications lines

*IEC 61000-4-6 Immunity to Conducted Disturbances Induced by Radio-frequency Fields*
10 V (rms) at 150 kHz to 80 MHz on I/O, dc power and communication lines

*IEC 61000-4-8 Power Frequency Magnetic Field Immunity*
30 A/m at 50 and 60 Hz

**PRODUCT SAFETY**

*Underwriters Laboratories (UL) for U.S. and Canada*
UL/UL-C listed as suitable for use in UL/UL-C listed Class 1, Groups A-D; Division 2; temperature code T4 enclosure based systems. These modules are also UL and UL-C listed as associated apparatus for supplying non-incendive communication circuits for Class 1, Groups A-D hazardous locations when connected to specified I/A Series processor modules as described in the *I/A Series DIN Rail Mounted Subsystem User's Guide* (B0400FA). Communications circuits also meet the requirements for Class 2 as defined in Article 725 of the National Electrical Code (NFPA No.70) and Section 16 of the Canadian Electrical Code (CSA C22.1). Conditions for use are as specified in the *I/A Series DIN Rail Mounted Subsystem User's Guide* (B0400FA).

**EUROPEAN LOW VOLTAGE DIRECTIVE 73/23/EEC AND EXPLOSIVE ATMOSPHERES (ATEX) DIRECTIVE 94/9/EC**

CENELEC (DEMKO) certified as EEx nA IIC T4 for use in CENELEC certified Zone 2 enclosure certified as associated apparatus for supplying non-incendive field circuits for Zone 2, Group IIC, potentially explosive atmospheres when connected to specified I/A Series processor modules as described in the *I/A Series DIN Rail Mounted Subsystem User's Guide* (B0400FA).

## ENVIRONMENTAL SPECIFICATIONS(1)

### Operating

**TEMPERATURE**
0 to +50°C (32 to +122°F)

**RELATIVE HUMIDITY**
5 to 95% (noncondensing)

**ALTITUDE**
-300 to +3,000 m (-1,000 to +10,000 ft)

### Storage

**TEMPERATURE**
-40 to +70°C (-40 to +158°F)

**RELATIVE HUMIDITY**
5 to 95% (noncondensing)

**ALTITUDE**
-300 to +12,000 m (-1,000 to +40,000 ft)

### Contamination

Class G3 (Harsh) as defined in ISA Standard, S71.04.
Pollution degree 2 as defined in IEC 664-1.

### Vibration

0.75 g from 5 to 500 Hz

## PHYSICAL SPECIFICATIONS

### Mounting

The redundant installation consists of two modules and a pair of splitter/combiners.

FCM100Et mounts on a Modular Baseplate. The Modular Baseplate can be mounted on a DIN rail or on a 19-inch rack using a mounting kit. Refer to PSS 21H-2X2 B4 for details.

FCM100Et can be placed in a horizontal or vertical version of a 2, 4, or 8-position Modular Baseplate. The two modules must be mounted in an odd slot and adjacent even slot on the Modular Baseplate (positions 1 and 2, 3 and 4, 5 and 6, or 7 and 8).

### Mass

284 g (10 oz) approximate (each module)

### Part Number

P0926GS

### Dimensions

**HEIGHT**
102 mm (4 in)
114 mm (4.5 in) including mounting lugs

**WIDTH**
45 mm (1.75 in)

**DEPTH**
104 mm (4.11 in)

### Fiber Optic Cabling: Splitter/Combiner, FCM100Et

**FIBER OPTIC CABLE**

*Cable Material*
MMF 62.5/125 um

*Cable Lengths*
3 m (9.9 ft) up to 2 km (6,560 ft), greater than 50m (165 ft)- user supplied

**CONNECTORS**

*Splitter/Combiner*
Two ceramic type LC fiber optic connectors

*FCM100Et*
Two ceramic type LC fiber optic connectors

*Optical Insertion Loss*
Equal to or less than 0.5 db through each connector

**OPTICAL INSERTION LOSS**
**SPLITTER /COMBINER**
4.5 db

(1) The environmental limits of this module may be enhanced by the type of enclosure containing the module. Refer to the applicable Product Specification Sheet (PSS) which describes the specific type of enclosure that is to be used.