Apter Power

EcoStruxure™

Foxboro™ DCS

Field Control Processor 280 (FCP280)

PSS 41H-1FCP280

Product Specification

April 2025

Schneider Electric™

https://www.se.com

Time strobe signals are delivered from custom switches over Ethernet cables. However, the method by which these Ethernet cables connect to the FCP280 baseplates differs depending on the baseplate. The standard vertical and horizontal baseplates' RH924YF's first HDLC connector (upper right-hand side of the baseplate) accepts time strobe signals via time strobe adapter (RH924ZQ), which is discussed in "Module Fieldbus and Time Strobe Splitters/Terminators" in *Standard and Compact 200 Series Subsystem User's Guide* (B0400FA).

Receiving the time strobe signals on the standard baseplate requires the use of the RH924ZQ adapter on the first HDLC port on the baseplate, and in this configuration, this port cannot be used for any other purpose. The dual cable baseplate (RH100JX) has two dedicated RJ-45 ports on its upper right-hand side to accept these Ethernet cables directly without the use of the RH924ZQ adapter.

Software Control Features

The FCP280 performs regulatory, logic, timing, and sequential control, as well as data acquisition, alarm detection, and alarm notification. Process variables are controlled using time-proven algorithms (mathematical computations performing specific functions). The algorithms are contained in functional control blocks, which on-site process engineers configure to implement the desired control strategies.

The versatility of the algorithms, coupled with the variety of FBMs available, provides control capabilities suited to a broad range of process applications. Control strategies ranging from simple feedback and cascade loops to highly sophisticated feedforward, nonlinear, and complex characterization control schemes are readily implemented.

The FCP280 also supports the following features:

- Setting and reading the FCP280 letterbug via the buttons on the faceplate
- Alarm enhancements to function blocks:
  - Re-alarming on changes to alarm priority
  - Re-alarming based upon a configurable time delay deadband, and alarm suppression based on time
- Optional UTC external time synchronization
- Improved controller performance
- Optional self-hosting mode allows the FCP280 to start up and run, executing its configured control scheme using the checkpoint file stored in flash memory. This allows the FCP280 to boot itself with a valid control database even if its host workstation is not present.
- Support for high speed capabilities such as ladder logic, Motor Driven Actuator Controller (MDACT), and Distributed Proportional Integral Derivative functionality (DPIDA)

Devices Supported

The FCP280 supports these 200 Series and equivalent devices on the 2 Mbps fieldbus:

- All Compact and Standard 200 Series FBMs, which can support many types of intelligent field devices, including those on Foundation Fieldbus, PROFIBUS, HART, and DeviceNet networks
- Foxboro DCS Field Device Systems Integrator (FDSI) modules
- Intrinsically Safe I/O Subsystem (ISCM) - see *Intrinsically Safe I/O Subsystem* (PSS 31H-2Y6)
- DCS Migration Fieldbus Modules for Siemens APACS+ Systems

- Time Strobe Fieldbus Baseplate Terminator (RH924ZQ) connects the optional “A” and/or “B” time strobe signals to the standard FCP280 baseplates only. The Time strobe splitter/terminator RH924ZQ is used on only the first standard baseplate containing an FCP280. This terminator also terminates the fieldbus signals.

  NOTE: The RH924ZQ adapter is not used with the dual cable FCP280 baseplate.

Figure 8 - Time Strobe Fieldbus Baseplate Terminator (RH924ZQ — FCP280 Only)

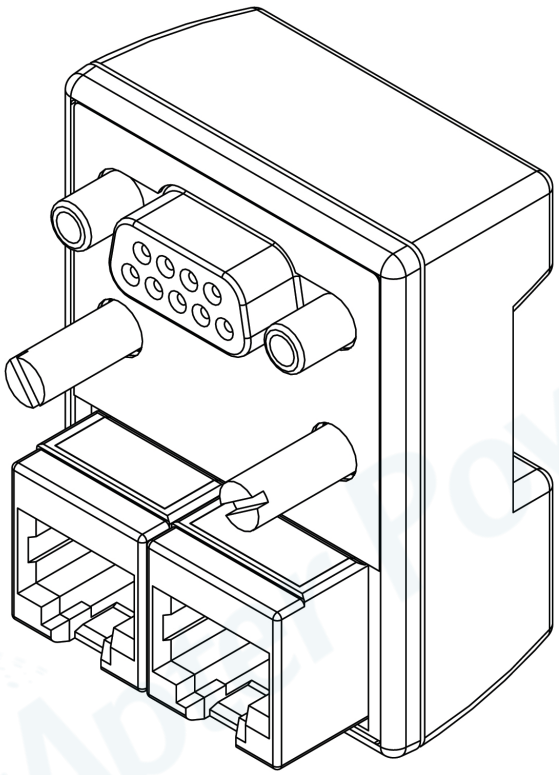

FCP280 Physical Specifications

Configuration	Single processor module. The fault-tolerant version consists of two processor modules, with an interconnecting fault-tolerant connector integral to the baseplate.
Mounting	May be placed in device specific 2-position baseplates designed for horizontal or vertical mounting — see FCP280 Baseplates, page 14. For the fault-tolerant FCP280, the two modules must be mounted in dedicated slots to allow for interconnecting fault-tolerant communication.
Dimensions: Module	• Height: 105 mm (4.13 in) or 116 mm (4.7 in) including mounting lugs • Width: 51.8 mm (2.04 in) • Depth: 147 mm (5.79 in)
Weight (Maximum)	0.8 kg (1.76 lb) for a single, non-fault-tolerant module.
Part Number	• FCP280: RH924YA • FCP280 Horizontal-Mounted Baseplate: RH924YL • FCP280 Vertical-Mounted Baseplate: RH924YF • FCP280 Dual Cable Baseplate: (Horizontal or Vertical mount) RH100JX • Fiber Adapter: RH924WA • Copper Adapter: RH924UQ • Splitter Adapters: ◦ Twinaxial Fieldbus Splitter: RH928CV ◦ Redundant Module Fieldbus Cable Adapter: RH924ZJ - For use when the FCP280 is in the middle of a 200 Series baseplate chain RH928CY - Enables the use of redundant module Fieldbus cables between baseplates to split and terminate the Modular Fieldbus and optional time strobe signals ◦ Time Strobe Adapter: RH924ZQ
Ethernet Switch to FCP280 Cabling	Cabling Connectors: • Fiber Adapter: Two ceramic type LC connectors on one end (for network adapters) with an MT-RJ connector on the other end (for switch) • Copper Adapter: RJ-45 connectors on both ends Fiber Optic Cable: • Cable Material: Multimode fiber (MMF) 62.5/125 µm plenum • Cable Lengths: Up to 50 m (164 ft) – Schneider Electric supplied. See “Network Cabling for FCP280 Network Adapters” in *Field Control Processor 280 (FCP280) User’s Guide* (B0700FW) for the appropriate specifications of allowed fiber optic cabling. Greater than 50 m – user supplied.