Apter Power

Installation Instructions

ControlLogix Controller and Memory Board

Catalog Numbers 1756-L1, 1756-L1M1, 1756-L1M2, 1756-L1M3, 1756-L55, 1756-L55M12, 1756-L55M13, 1756-L55M14, 1756-L55M16, 1756-L55M22, 1756-L55M23, 1756-L55M24, 1756-L61, 1756-L62, 1756-L63, 1756-L64, 1756-L65, 1756-M1, 1756-M2, 1756-M3, 1756-M12, 1756-M13, 1756-M14, 1756-M16, 1756-M22, 1756-M23, 1756-M24, 1784-CF64, 1784-CF128

Topic	Page
Important User Information	3
Explosion Hazards	4
Preventing Electrostatic Discharge	4
Removing Module While Under Power (RIUP)	4
Environment and Enclosure	5
North American Hazardous Location Approval	6
European Hazardous Location Approval	7
Before You Begin	8
Replace a Suspected Failed Controller	9
Resolving Common Errors	11

Allen-Bradley • Rockwell Software Rockwell Automation

Apter Power

Before You Begin

Read this section for important information about using these products, noting that this publication covers the products shown in the table.

Product	Cat. No.	Series
ControlLogix5550 controller	1756-L1, 1756-L1M1, 1756-L1M2, 1756-L1M3	A
ControlLogix5555 controller	1756-L55, 1756-L55M12, 1756-L55M13, 1756-L55M14, 1756-L55M16, 1756-L55M22, 1756-L55M23, 1756-L55M24	A
ControlLogix5561 controller	1756-L61	A, B
ControlLogix5562 controller	1756-L62	A, B
ControlLogix5563 controller	1756-L63	A, B
ControlILogix5564 controller	1756-L64	B
ControlLogix5565 controller	1756-L65	B
ControlLogix5550 memory board	1756-M1, 1756-M2, 1756-M3	A
ControlLogix5555 memory board	1756-M12, 1756-M13, 1756-M14, 1756-M16, 1756-M22, 1756-M23, 1756-M24	A
Industrial CompactFlash card	1784-CF64, 1784-CF128	A

Apter Power

Use the following table to determine which firmware revisions to use with your controller and memory board combination.

Controller and Memory Board Combinations

Controller and Memory Board	Series	Use this revision or later	
1756-L1	None	Any.	
1756-L1M1			
1756-L1M2			
1756-L1M3			
1756-L55M12		10.*x* or later.	
1756-L55M13		6.*x* or later.	
1756-L55M14			
1756-L55M16			
1756-L55M22		10.*x* or later.	
1756-L55M23		8.*x* or later.	
1756-L55M24			
1756-L61	A	12.*x* or later.	
	B	13.40 or later.	
1756-L62	A	12.*x* or later.	
	B	13.40 or later.	
1756-L63	A	**No** CompactFlash card	10.*x* or later.
		CompactFlash card	11.*x* or later.
	B	13.40 or later.	
1756-L64	B	16 or later.	
1756-L65	B	17 or later.	

Make sure that the firmware revision is compatible with your version of RSLogix 5000 software.

Apter Power

Installing a Memory Board on a ControlLogix5550 or ControlLogix5555 Controller

ATTENTION

Before you install or replace the memory board, disconnect the battery from the controller. Otherwise, you may damage the memory board.

WARNING

When you connect or disconnect the battery an electrical arc can occur. This could cause an explosion in hazardous location installations. Be sure that power is removed or the area is nonhazardous before proceeding.
For Safety information on the handling of lithium batteries, including handling and disposal of leaking batteries, see Guidelines for Handling Lithium Batteries, publication AG-5-4-NOV04.

If your ControlLogix5550 or ControlLogix5555 controller requires a different memory board, install or replace the board as described. The tools required are:

- #2 Philips screwdriver
- grounding wriststrap

Before you replace the memory board, determine if you must update the controller firmware.

Update the Controller Firmware

Controller	Replacing Memory Board with	Action
ControlLogix5550		No update is required at this time.
ControlLogix5555	Same catalog number of memory board	No update is required at this time.
	Different catalog number of memory board For example, you are replacing a 1756-M13 memory board with a 1756-M23 memory board	Before you replace the board update the firmware of the controller to a revision that is compatible with the memory board that you will install.

Remove the Side Plate of the Controller

1. Lay the controller on its side with the label facing up.

2. Remove the two screws that attach the side plate to the controller while wearing a grounding wriststrap.

3. Rotate the side plate (A) up and unhook it from the controller, as shown in the figure.

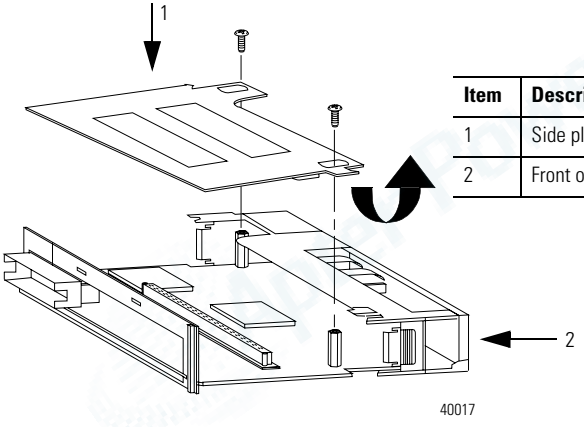

Item	Description
1	Side plate
2	Front of controller

Apter Power

Remove the Existing Memory Board

If the controller does not already have a memory board, as shown in the figure, refer to the Install the Memory Board section.

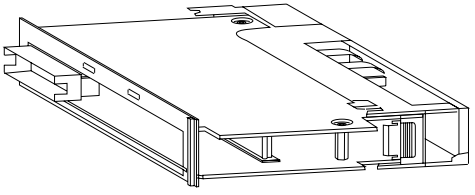

1. Pull the plastic back edge of the controller out slightly to clear the tabs on the memory board.

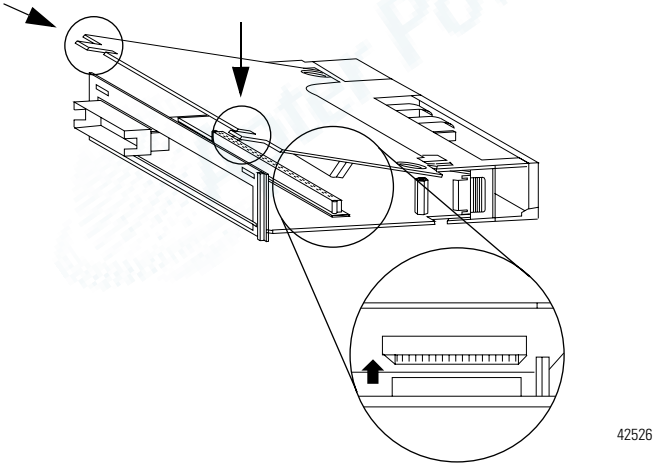

2. Gently separate and remove the memory board from the controller.

Install the Memory Board

1. Place the memory board over the connector and slide the memory board into the controller.

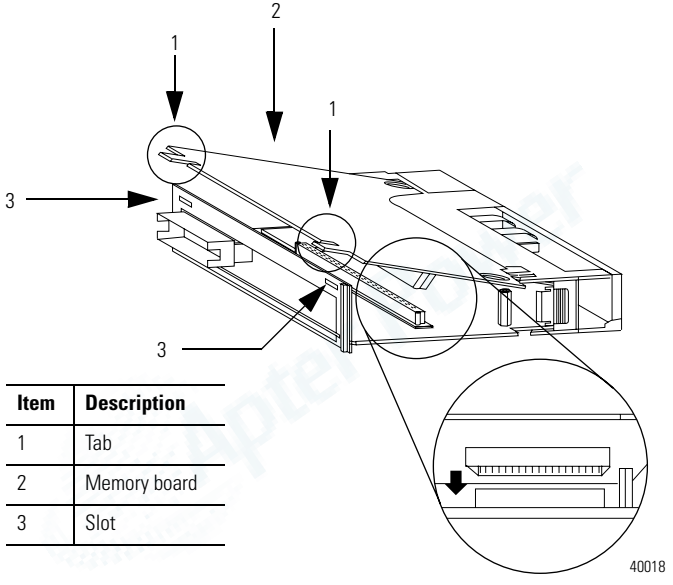

Item	Description
1	Tab
2	Memory board
3	Slot

2. Pull the plastic back edge of the controller out slightly to clear the tabs of the memory board.

3. Line up the connectors.

4. Place your hands on the boards over the connectors and gently squeeze them together.

5. Make sure that the tabs on the memory board extend through the slots on the plastic housing of the controller.

Apter Power

Replace the Side Plate

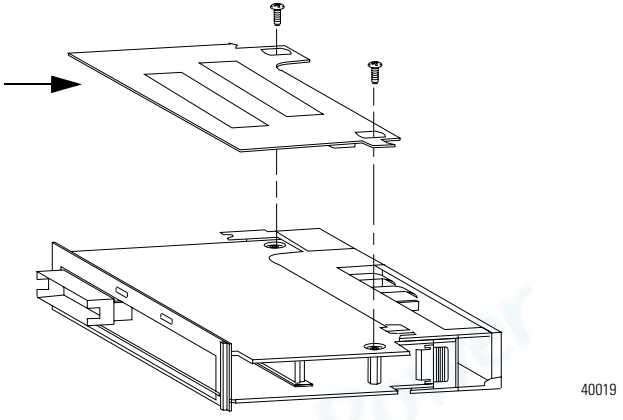

1. Line up the hinge tabs on the side plate with the slots in the plastic housing of the controller.
2. Gently press the side plate against the controller.
3. Replace the screws.

Attach Labels

To identify which memory board is installed, place the memory board label on the side of the controller.

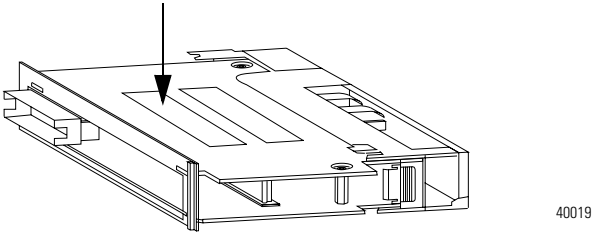

Apter Power

Specifications

Specifications - ControlLogix Controllers

Cat. No.	Memory		Non-volatile Memory	Backplane Current		Power Dissipation	Thermal Dissipation	Weight, approx.
	Data and Logic[1]	Yes[2]		@ 5.1V DC	@ 24V DC			
1756-L55M22	750 KB	208 KB	Yes	1.23 A	0.014 A	5.6 W	19.1 BTU/hr	0.35 kg (12.5 oz)
1756-L55M23	1.5 MB							0.35 kg (12.5 oz)
1756-L55M24	3.5 MB			1.25 A		5.7 W	19.4 BTU/hr	0.36 kg (12.8 oz)
1756-L61/A	2 MB	478 KB	Yes[3]	1.20 A	14 mA	3.5 W	11.9 BTU/hr	0.32 kg (11.3 oz)
1756-L62/A	4 MB							
1756-L63/A	8 MB							
1756-L61/B	2 MB							0.35 kg (12.4 oz)
1756-L62/B	4 MB							
1756-L63/B	8 MB							
1756-L64/B	16 MB							
1756-L65/B	32MB							

(1) Data and logic memory stores: tags other than I/O, produced, or consumed tags; logic routines; and communication with OPC/DDE tags that use RSLinx software (also uses I/O memory).

(2) I/O memory stores: I/O tags, produced tags, consumed tags, communication via Message (MSG) instructions, communication with workstations, and communication with OPC/DDE tags that use RSLinx software (also uses data and logic memory).

(3) Requires a 1784-CF64 Industrial CompactFlash card.

Apter Power

ControlLogix Controller Common Specifications - 1756-L1, 1756-L1M1, 1756-L1M2, 1756-L1M3, 1756-L55, 1756-L55M12, 1756-L55M13, 1756-L55M14, 1756-L55M16, 1756-L55M22, 1756-L55M23, 1756-L55M24, 1756-L61, 1756-L62, 1756-L63, 1756-L64, and 1756-L65

Attribute	Value
Temperature, operating	IEC 60068-2-1 (Test Ad, Operating Cold), IEC 60068-2-2 (Test Bd, Operating Dry Heat), IEC 60068-2-14 (Test Nb, Operating Thermal Shock): • 0 … 60 °C (32…140 °F)
Temperature, storage	IEC 60068-2-1 (Test Ab, Unpackaged Nonoperating Cold), IEC 60068-2-2 (Test Bb, Unpackaged Nonoperating Dry Heat), IEC 60068-2-14 (Test Na, Unpackaged Nonoperating Thermal Shock): • -40… 85 °C (-40…185 °F)
Relative humidity	IEC 60068-2-30 (Test Db, Unpackaged Damp Heat): • 5…95% noncondensing
Vibration	IEC60068-2-6 (Test Fc, Operating): • 2 g @ 10…500 Hz
Shock, operating	IEC60068-2-27 (Test Ea, Unpackaged Shock): • 30 g
Shock, nonoperating	IEC60068-2-27 (Test Ea, Unpackaged Shock): • 50 g
Emissions	CISPR 11: • Group 1, Class A
ESD immunity	IEC 61000-4-2: • 6 kV contact discharges • 8 kV air discharges
Radiated RF immunity	IEC 61000-4-3: • 10V/M with 1 kHz sine-wave 80% AM from 80…2000 MHz • 10V/M with 200 Hz 50% Pulse 100% AM at 900 Mhz • 10V/M with 200 Hz 50% Pulse 100% AM at 1890 Mhz • 1V/m with 1 kHz line-wave 80% AM from 2.0…2.7 GHz
EFT/B immunity	IEC 61000-4-4: • ±4 kV at 5 kHz on communications ports
Surge transient immunity	IEC 61000-4-5: • ±2 kV line earth (CM) on communications ports

Apter Power

ControlLogix Controller Common Specifications - 1756-L1, 1756-L1M1, 1756-L1M2, 1756-L1M3, 1756-L55, 1756-L55M12, 1756-L55M13, 1756-L55M14, 1756-L55M16, 1756-L55M22, 1756-L55M23, 1756-L55M24, 1756-L61, 1756-L62, 1756-L63, 1756-L64, and 1756-L65

Attribute	Value
Conducted RF immunity	IEC 61000-4-6: • 10V rms with 1 kHz sine-wave 80% AM from 150 kHz…80 MHz
Enclosure type rating	None, open style
Isolation voltage	30V (continuous), Basic Insulation Type, RS232 to system • Controllers type tested to withstand 707V DC for 60 s
Wiring category[1]	2 - on communications ports
Programming cable	1756-CP3 or 1747-CP3 serial cable
North American temperature code	T4A
IEC temperature code	T4
Intrinsically safe	No
Replacement battery	1756-L1, 1756-L1M1, 1756-L1M2, 1756-L1M3: 1756-BA1 (0.59 g lithium) 1756-L55, 1756-L55M12, 1756-L55M13, 1756-L55M14, 1756-L55M16, 1756-L55M22, 1756-L55M23, 1756-L55M24: 1756-BA1 (0.59 g lithium) 1756-L61/A, 1756-L62/A, 1756-L63/A: 1756-BA1 (0.59 g lithium) 1756-L61/B, 1756-L62/B, 1756-L63/B, 1756-L64/B, 1756-L65/B: 1756-BA2(0.50 g lithium) 1756-BATM battery module: 1756-BATA (10 g lithium)

[1] Use this Conductor Category information for planning conductor routing. Refer to Industrial Automation Wiring and Grounding Guidelines, publication 1770-4.1.