PR6423

Specifications Sheet
December 2024

8mm Eddy Current Sensor

Non-contact sensor designed for critical turbomachinery applications such as steam, gas and hydro turbines, compressors, gearboxes, pumps and fans to measure radial and axial shaft dynamic displacement; position, eccentricity and speed.

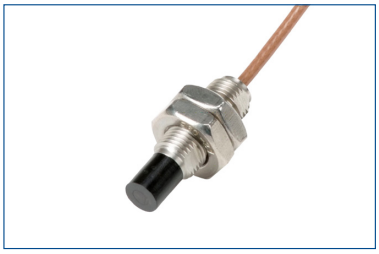

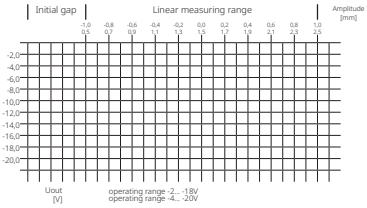

Performance	
Linear Measurement Range	2 mm (80 mils)
Initial Air Gap	0.5 mm (20 mils)
Incremental Scale Factor (ISF)	ISO: 8 V/mm (203.2 mV/mil) ± 5% @ temperature range 0 to 45°C (+32 to +113°F)
Deviation from best fit straight line (DSL)	± 0.025 mm (± 1 mil) @ temperature range 0 to 45°C (+32 to +113°F)
Measuring Target	
Minimum Shaft Diameter	25 mm (0.79")
Target Material (Ferromagnetic Steel)	42CrMo4 (AISI/SAE 4140) Standard Other (On Request)
Environmental, General	
Protection Class	IP66, IEC 60529
Operating Temperature Range	Sensor incl. 1m Cable: -35 to +180°C (-31 to 356°F) Cable & Connector: -35 to +150°C (-31 to 302°F)
Material	Sensor Tip (PEEK Polyether Ether Ketone), Case (Stainless Steel) Cable (PTFE Polytetrafluoroethylene), Connector (Brass, nickel-plated)
Weight (Sensor with 1m Cable)	Approx. 100 grams (3.53 oz)

AMS

EMERSON

Compliance and Certifications	
CE	2014/30/EU (EN 61326-1) 2014/34/EU 2011/65/EU
ATEX	EN 60079-0 EN 60079-11
IEC-Ex	IEC 60079-0 IEC 60079-11 IEC 60079-26
CSA	CAN/CSA-C22.2 NO. 0-M91 CAN/CSA-C22.2 NO. 157-92 CAN/CSA-C22.2 NO. 213-M1987 CAN/CSA-E60079-15-02 (R2006) CAN/CSA-C22.2 NO. 25-1966 CAN/CSA-C22.2 NO. 61010-1-04 ANSI/UL Standard 913-2004 ANSI/UL Standard 1604-1995 UL 60079-15 2002 UL 61010-1

Hazardous Area Approvals

Intrinsic Safety (ia)	
ATEX / IEC-Ex / CSA	Area classification depends on converter, see converter documentation for details. Sensor temperature classification: T6: Ta ≤ 64°C T4: Ta ≤ 114°C T3: Ta ≤ 160°C
Non-sparking (nA)	
ATEX / IEC-Ex / CSA	Area classification depends on converter, see converter documentation for details. Sensor temperature classification: T6: Ta ≤ 64°C T4: Ta ≤ 114°C T3: Ta ≤ 160°C

info@apterpower.com +86 18106909650 WHATSAPP QUOTE > SOURCE PAGE 2 / 6

Dimensions

PR6423/xxx-xxx (Standard)

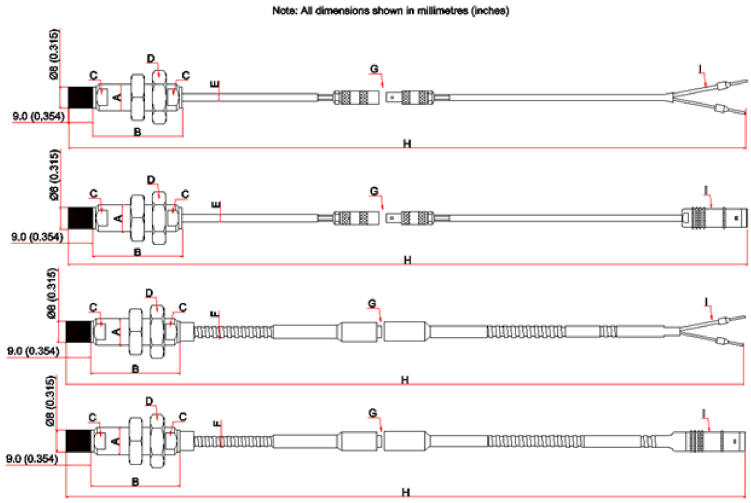

A. Case thread, M10x1 or 3/8-24UNF
B. SW 11 mm for M10 threads, SW 7/9-16 in for 3/8-24UNF threads
C. Standard cable diameter 2.8 mm (0.110 in), minimum bending radius 25 mm (0.984 in)
D. Armored cable diameter 6 mm (0.236 in), minimum bending radius 35 mm (1.378 in)
E. Optional Adapter Plug after 1m cable from Sensor
F. Cable Length (Tolerances 0... +10%)
G. Lemo connector (male), 11.0 mm (0.433 in) diameter or open cable end

Ordering Information

Tip Diameter	Case Threads	Armored Cable	Model No.
8mm	M10x1	No	PR6423/00
		Yes	PR6423/01
			PR6423/03*
	3/8"-24 UNF	No	PR6423/10
		Yes	PR6423/11
			PR6423/13*

**Armored cable option for Reverse Mount, if Adapter Plug is chosen.*

Model No.	Case Thread X	Adapter Plug X	Cable Length X	Cable End X
PR6423/00	**0** 25mm	**0** With	**0** 4.0m	**0** Lemo*
PR6423/01	**1** 35mm	**1** Without	**1** 5.0m	**1** Open
PR6423/10	**2** 45mm		**3** 8.0m	
PR6423/11	**3** 55mm		**F** 9.0m	
	4 65mm		**4** 10.0m	
	5 75mm			
	6 85mm			
	7 95mm			
	8 105mm			
	9 115mm			
	E 155mm			
	H 195mm			
	R Reverse Mount			

**Not available, if Reverse Mount without Adapter Plug is chosen.*

Example: PR6423/000-000
ECS 8mm, M10X1, NO ARMOR, 25MM SLEEVE, 1+3M CABLE, LEMO

3 Application and design

3.1 Application

The CON 021 or CON 031 Signal Converters in combination with sensors of type PR 6422 to PR 6426 form eddy current measuring chains to be used for static and dynamic distance measurements at all kinds of rotating machinery. This means that slow axial displacements as well as fast radial vibrations of rotating machines can be measured. By using pulse wheels or key marks stuck on the shaft, the speed of the machine can be measured and key pulses generated.

Sensors and signal converters are adjusted together and are delivered as complete measuring chains in order to achieve a maximum accuracy. For this reason it is important to always operate sensors and converters together. The type of the sensor and its serial number are marked on the type plate of the converter.

The characteristics of the measuring chain are adapted to the material mainly used for turbo machinery (reference material: 42 Cr Mo 4, according to SAE 4140). The standard adjustment of the measuring chains is generally related to this material – if necessary, other materials can be used for the adjustment (see installation guide PR 642x, Eddy Current Sensors). During installation at the machine only the distance between the head of the sensor and the measuring target are to be adjusted. Criterion for the adjustment of the sensor is the output signal of the converter.

Supply circuits for the eddy current sensor and the measuring electronic are contained in the converter. The nominal supply voltage for the converter is -24 V DC, the nominal range of the output signal, proportional to the nominal measuring range of the sensor, may be set to either -4 to -20 V or -2 to -18 V. The output voltage of converters for special measuring ranges (CON 021 / 91x-xxx or CON 031 / 91x-xxx) have a firmly adjusted range of -4 to -20V.

Five eddy current probes are at disposal. The actual type to be used depends on the measuring range, on the available space for measuring and on the environmental temperature.

3.2 Design

The CON 021 and CON 031 signal converters are accommodated in a simple housing prepared for the installation in a mounting box. Connection of the eddy current probe to the CON 021 is made with a LEMO connector at the front of the converter (see Figure 3-1), the CON 031 is provided with screw terminals for transducers without connector (see Figure 3-2). See Figure 3-3 for details of an open CON 021. The component layout of CON 031 is identical to the layout of the CON 021.

Figure 3-1: CON 021 Converter

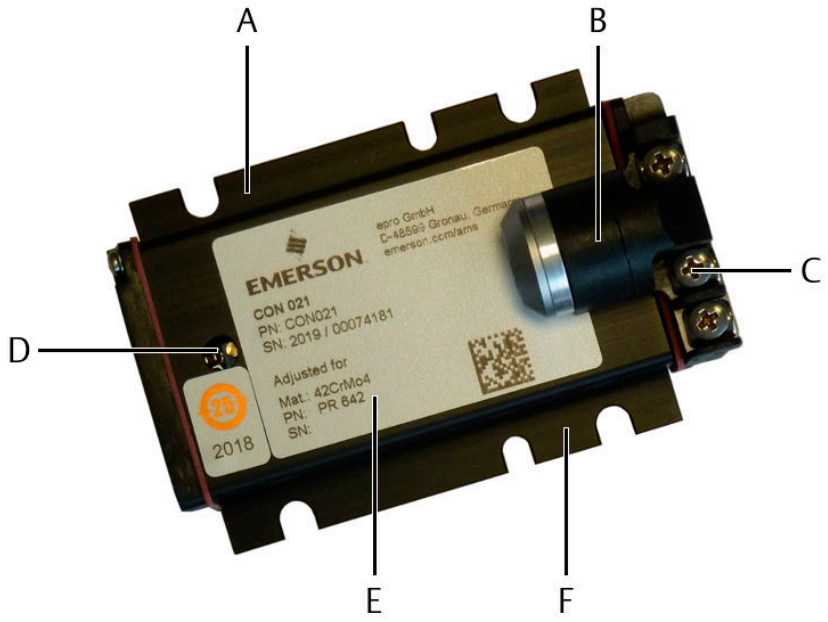

A. Mounting plate
B. Sensor connector (LEMO socket)
C. Screw terminals for voltage supply (-24 V DC) and signal output.
D. Calibration element: Potentiometer for fine tuning.
E. Label
F. Mounting plate

8 Technical data

Only specifications with indicated tolerances or limit values are required. Data without tolerances or without error limits are informative data and not guaranteed. Technology is under constant development, and specifications are subject to change without notice. If not stated otherwise, the specifications are valid for the nominal supply voltage of -24V.

8.1 Input

Connection for eddy current sensors. Self locking LEMO socket (CON 021) or screw terminals (CON 031) for connection of Emerson sensors PR 6422/xxx-xxx, PR 6423/xxx-xxx, PR 6424/xxx-xxx, PR6424/xxx-xxx, and PR 6426/xxx-xxx.

8.2 Supply

Supply voltage range	-23 to -28 V for output voltage range -4 to -20 V
	-21 to -28 V for output voltage range -2 to -18 V
	-18 to -21 V with reduced output voltage range
Nominal supply current	<15 mA, with 10 kΩ load resistance
Reverse connect protection	Reverse connect protection of all 3 terminals (GND, Output, and -24 V)
Nominal operating frequency	approximately 1.25 MHz
De−adjustment of oscillator for adjacent arrangement of sensors	open wire bridge D in Figure 3-3 (delivery state: closed)

8.3 Output

DC voltage with superimposed AC signal corresponding to vibration or displacement of the shaft. Open-circuit and short-circuit proof.

Output voltage range	Wire bridge A in Figure 3-3 closed: -2 to -18 V (factory setting)
	Wire bridge A in Figure 3-3 open: -4 to -20 V
	adjusted with 100kΩ load resistance
Limit range	-1 to -22 V (at -24 V supply voltage)
Nominal frequency range	0 to 20 kHz (-3 dB) with C - load = 10 nF
	0 to 15 kHz (-3 dB) with C - load = 20 nF
Rise time	<15 µs, with C - load = 1 nF
Output impedance	approximately 100 Ω
Load resistance	nominal value 100 kΩ (for R = 10 kΩ, error <1%)

CE – compatibility		Test according to: EN 55011(1998) & A1(1999) & A2(2001) (emitted interference) EN 61362(1997) & A1(1998) & A2(2001) & A3(2003) IEC 61326−1:2005 including EN 61000−4−5:2006 (interference resistance). The converter CON 021/... and CON 031/... meets the specifications mentioned above. The test specifications as setup, test levels, pass criteria, and so on, are described in the document “CON0x1_EMV −Testspezifikationen”. For copies of this document contact Emerson.	
Housing	Dimensions	see Figure 8-2 or Figure 8-3	
	Material	AlMgSi0,5F22	
Weight		net weight	CON 021: 95 g and CON 031: 85 g
		with packing	CON 021: 0.56 kg and CON 031: 0.55 kg

Figure 8-2: Dimensions CON 021

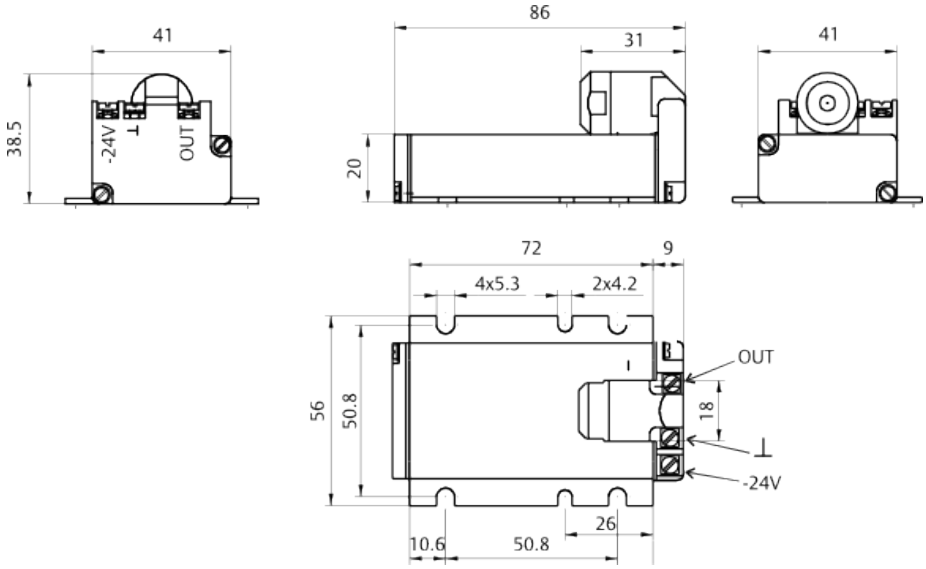

All dimensions in mm.

GLOBAL INDUSTRIAL AUTOMATION SOURCING

Ready to source this part?

Ask for availability, pricing and delivery options.

Request a fast quote

Include the product title and any required part number or quantity.

EMAIL

info@apterpower.com

PHONE

+86 18106909650

SCAN TO CHAT ON WHATSAPP

CHAT ON WHATSAPP >

PRODUCT: PR6423/003-110 CON021 / 8 mm Eddy Current Sensor with CON021 Signal Converter

The enclosed manufacturer pages are reproduced without alteration to technical content.
Apter Power is not an authorized distributor, reseller or representative of the products featured.
Product names, trademarks, brands and logos remain the property of their respective owners.