Apter Power

FOXBORO®

PSS 21H-1B2 B3

I/A Series® Hardware
Control Processor 30

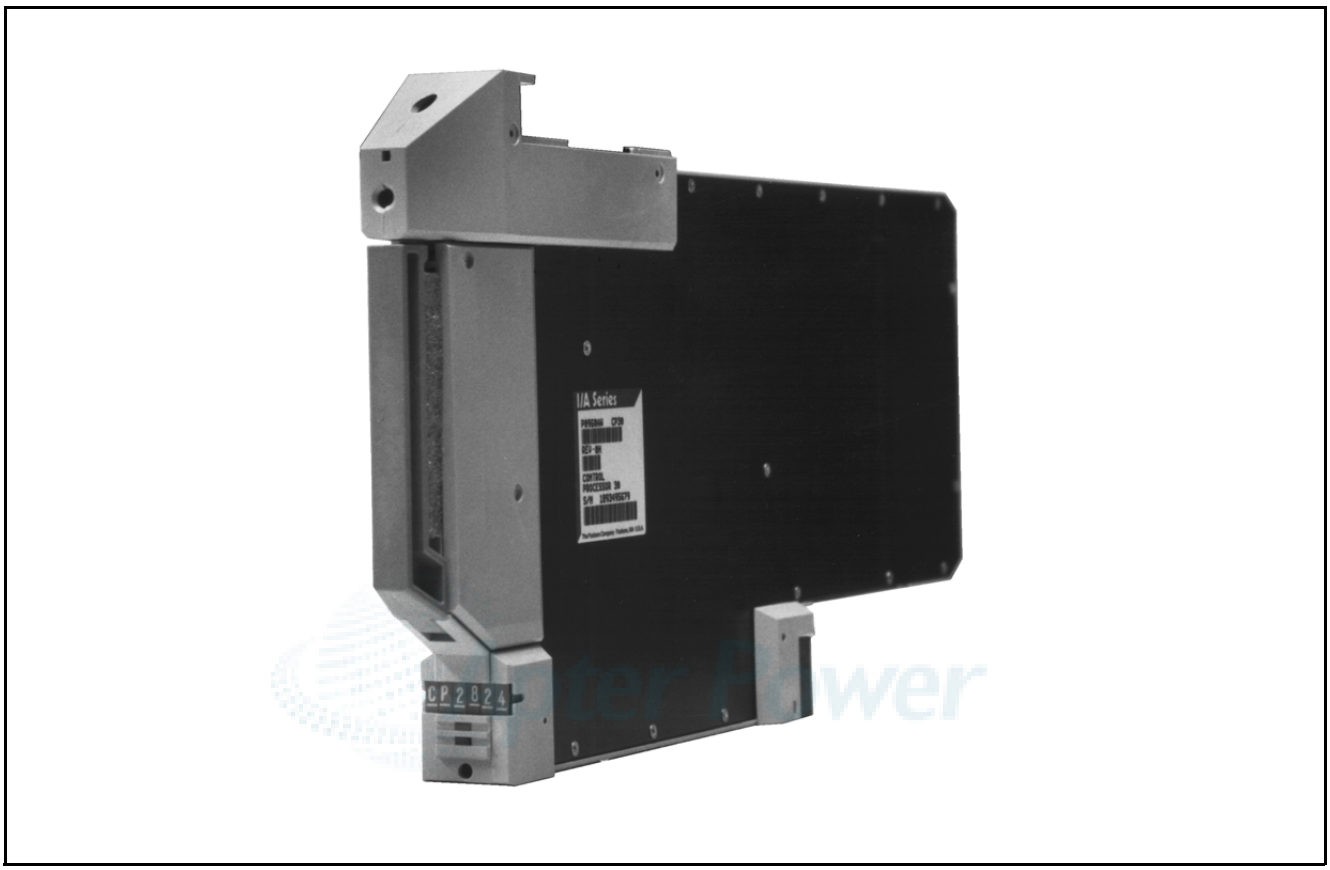

The Control Processor 30 (CP30) performs regulatory, logic, timing, and sequential control, together with connected:

- Fieldbus Modules (FBMs)
- Fieldbus Cluster I/O Cards (FBCs)
- SPECTRUM Migration Integrator I/O
- SPEC 200 Migration Integrator I/O
- SPEC 200 MICRO Migration Integrator I/O

It also performs data acquisition and alarm detection and notification, and may optionally serve as an interface for one or more Panel Display Stations.

The non-fault-tolerant version of the Control Processor 30 is a single-width processor module. The fault-tolerant version consists of two single-width processor modules.

SIEBE®
A Siebe Group Company

Product Specifications

Enhanced Reliability

The Control Processor 30 offers optional fault-tolerance for enhanced reliability. The fault-tolerant control processor configuration consists of two parallel-operating modules with two separate connections to the Nodebus and to the Fieldbus.

The two control processor modules, married together as a fault-tolerant pair, are designed to provide continued operation of the unit in the event of virtually any hardware failure occurring within one module of the pair. Both modules receive and process information simultaneously, and faults are detected by the modules themselves. One of the significant methods of fault detection is comparison of communication messages at the module external interfaces. Upon detection of a fault, self-diagnostics are run by both modules to determine which module is defective. The non-defective module then assumes control without affecting normal system operations.

To further ensure reliable communications, the fault-tolerant control processor performs error detection and address verification tests in its Nodebus and Fieldbus interfaces.

For enhanced reliability during maintenance operations, the Control Processor 30 is equipped with a recessed reset button, located at the front of the module. This feature provides for manually forcing a module power off and on (reboot) without removing the module from the enclosure.

Diagnostics

The Control Processor 30 uses three types of diagnostic tests to detect and/or isolate faults:

- Power-up self-checks
- Run-time and watchdog timer checks
- Off-line diagnostics

Power-up self-checks are self-initiated when power is applied to the control processor. These checks perform sequential tests on the various control processor functional elements. Red and green indicators at the front of the control processor module reflect the successful (or non-successful) completion of the various phases of the control processor startup sequence.

The run-time and watchdog timer checks provide continuous monitoring of control processor functions during normal system operations. The operator is informed of a malfunction by means of printed or displayed system messages.

Off-line diagnostics are temporarily loaded into the system for the purpose of performing comprehensive tests and checks on various system stations and devices. Using the off-line diagnostics, a suspected fault in the control processor can be isolated and/or confirmed.

Fieldbus Modules

Fieldbus Modules provide connection of digital I/O, analog I/O, and Intelligent Transmitters to control processors. There are two types of Fieldbus Modules: main and expansion. Some main modules can be expanded using expansion modules.

A wide range of Fieldbus Modules is available to perform the signal conversion necessary to interface the control processor with field sensors and actuators. For further information on the Fieldbus Modules, refer to the Fieldbus Modules Product Specification Sheet (PSS).

Fieldbus Flexibility

The Control Processor 30 is used in three different Fieldbus configurations, which provide broad flexibility in Fieldbus implementation:

- Local Fieldbus (Figure 1) - Used only within the enclosure, the local bus can extend up to 10 m (30 ft). Up to 24 Fieldbus Modules (excluding expansion modules) attach directly to the local bus, which is redundant.

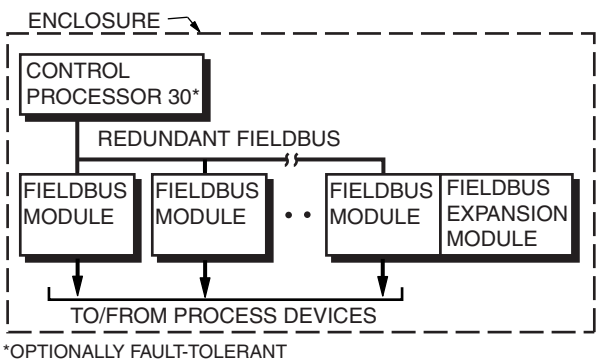

Figure 1. Local Fieldbus (Typical Configuration)

- Twinaxial (Dual-Conductor Coaxial) Fieldbus Extension (Figure 2) - Using twinaxial cable, the Fieldbus can optionally extend outside of the enclosure and can be up to 1800 m (6,000 ft) in length. Up to 64 Fieldbus Modules (excluding expansion modules) attach to the extended bus through Fieldbus Isolators. (Up to 24 Fieldbus Modules, excluding expansion modules, can connect to each isolator.) The twinaxial Fieldbus extension may be redundant.

- Fiber Optic Fieldbus Extension (Figure 3) - The fiber optic Fieldbus can optionally extend the distance as well as add application versatility and security. Overall Fieldbus length can be up to 20 km (12.4 mi). Like the twinaxial Fieldbus configuration, the fiber optic Fieldbus configuration supports up to 64 Fieldbus Modules (excluding expansion modules), up to 24 modules per isolator.

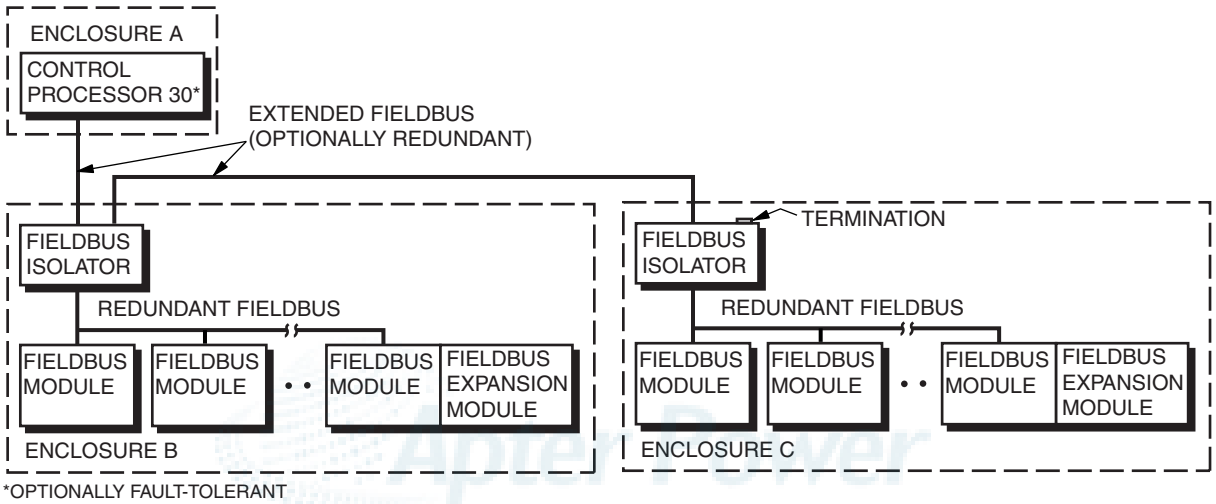

Figure 2. Twinaxial Fieldbus Extension (Typical Configuration)

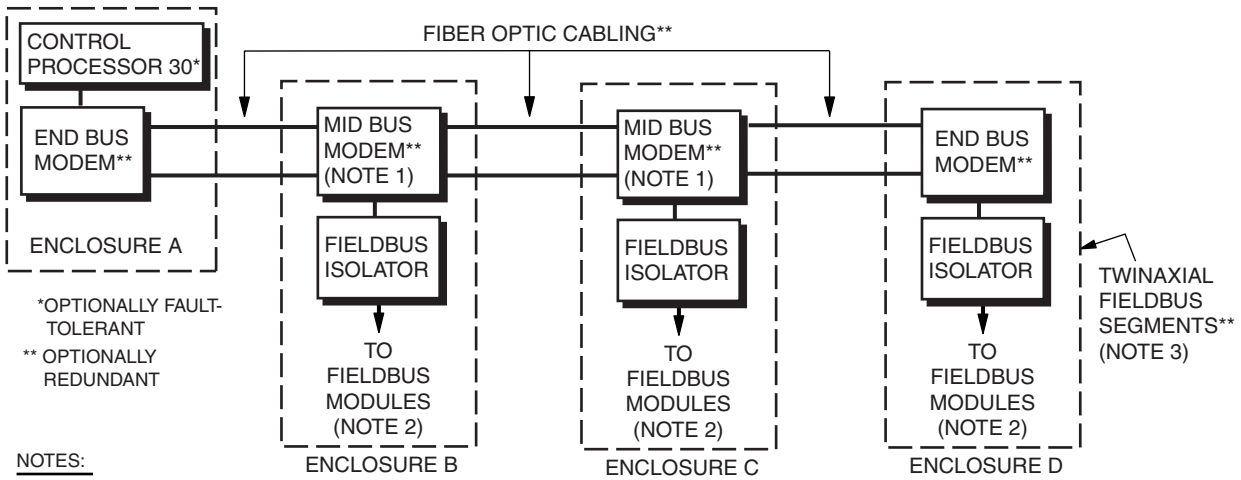

NOTES:

1. THE MID BUS MODEMS ARE USED WHEN THE CONFIGURATION ENCOMPASSES MORE THAN TWO ENCLOSURES. THEY MAY ALSO BE USED AS REPEATERS, WHERE ADDED FIBER OPTIC CABLING DISTANCE IS REQUIRED.

2. CONNECTION OF THE FIBER ISOLATORS TO THE FIELDBUS MODULES (FBMs) IS SIMILAR TO THAT SHOWN IN FIGURE 2.

3. ANY TWINAXIAL FIELDBUS SEGMENT CAN BE EXTENDED TO SERVICE FBMs IN ANOTHER ENCLOSURE. (TWINAXIAL CABLING BETWEEN ENCLOSURES IS SHOWN IN FIGURE 2.)

Figure 3. Fiber Optic Fieldbus Extension (Typical Configuration)

All three Fieldbus configurations use serial data communication complying with Electronic Industrial Association (EIA) Standard RS-485. The data transmission rate is 268.75 Kbps.

Panel Display Station Interfacing

The Control Processor 30 achieves the capability to interface Panel Display Stations when the DSI (Display Station Interface) block is selected via the configurator. In this capacity the Control Processor 30 can interface up to 24 Panel Display Stations, or a combination of Fieldbus modules (which may include associated Auto/Manual Stations) and Panel Display Stations mixed on the same Fieldbus. (Note, however, that per configuration rules, one Panel Display Station counts as two Fieldbus Modules.)

Control strategy should be planned such that all blocks involved with the Panel Display Station, Auto/Manual Station, and the control loops being monitored or controlled are in the same Control Processor 30, and ideally in the same compound.

The Control Processor 30 connects to the Panel Display Stations and Fieldbus Modules via either of two types of Fieldbus communications media: twinaxial cable or fiber optic cable. Figure 4 shows a typical twinaxial Fieldbus configuration, and Figure 5 shows a typical fiber optic Fieldbus configuration. (Refer to Fiber Optic Fieldbus Product Specification Sheet PSS 21H-7P1 B4 for additional fiber optic Fieldbus application information.)

Cluster I/O Subsystem Interfacing

The Control Processor 30 interfaces with the Fieldbus Cluster Input/Output Subsystem that consists of the Fieldbus, a multi-slot chassis configuration of a Fieldbus Processor (FBP10), analog/digital Fieldbus Cards (FBCs) and power supply and power monitor card. These Cluster I/O subsystems meet the needs of applications where a high number of channels per card are required. Figure 6 shows a typical twinaxial Fieldbus configuration. (Refer to the Fieldbus Cluster I/O Subsystem PSS 21H-2T1 B3 for additional information.)

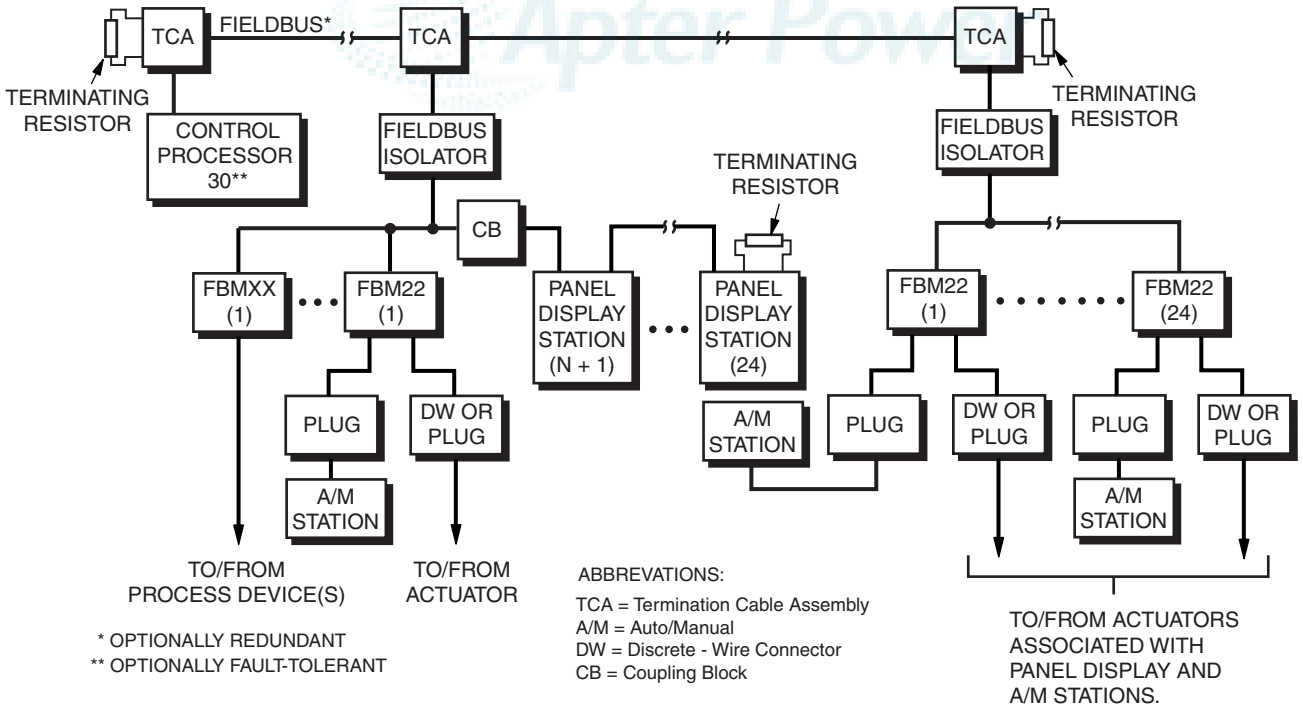

Figure 4. Panel Display Station Interface Configuration using Twinaxial Fieldbus (Typical Configuration)

FUNCTIONAL SPECIFICATIONS

Processor Type

Microprocessor-based Intel 386 with stored programs, using high-speed communication capability.

Memory

SIZE

4 MB storage

ERROR DETECTION

Parity provides single-bit error detection for each byte.

Process I/O Communications

LOCAL TWINAXIAL[A] FIELDBUS

Type

EIA RS-485

Distance

10 m (30 ft)

Transmission Rate

268.75 Kbps

EXTENDED TWINAXIAL[A] FIELDBUS[B]

Type

EIA RS-485

Distance

1800 m (6000 ft)

Transmission Rate

268.75 Kbps

FIBER OPTIC FIELDBUS[C]

Type

Optical

Distance

20 km (12.4 mi)

Transmission Rate

268.75 Kbps

[A] The twinaxial Fieldbus uses a dual-conductor coaxial cable.

[B] Fieldbus Isolator(s) required.

[C] Fiber Optic Modem(s) required.

[D] Excluding expansion modules.

Process I/O Capacity

LOCAL

24 Fieldbus Modules[D], maximum

EXTENDED

64 Fieldbus Modules[D], maximum (24 maximum on any one Fieldbus Isolator)

PANEL DISPLAY STATION INTERFACING

Up to 64 FBMs[D] or FBM equivalents (24 maximum on any one Fieldbus Isolator). One Panel Display Station counts as two FBMs. For example, if 24 FBMs are used, only 20 Panel Display Stations may be used.

Power Requirements

INPUT VOLTAGE (REDUNDANT VOLTAGE)

39 V dc typical

CONSUMPTION (PER NON-FAULT-TOLERANT MODULE)

15 W, maximum

Indicators

Red and green light-emitting diodes (LEDs) indicate operational status.

Internal Diagnostics

Self-checking performed at power-up. Runtime checks and watchdog timer function performed during operation.

ENVIRONMENTAL SPECIFICATIONS[A]

Operating
TEMPERATURE
0 to 60°C (32 to 140°F)
RELATIVE HUMIDITY
5 to 95% (Noncondensing)
ALTITUDE
-300 to +3,000 m (-1,000 to +10,000 ft)

Storage
TEMPERATURE
-40 to +70°C (-40 to +158°F)
RELATIVE HUMIDITY
5 to 95% (Noncondensing)
ALTITUDE
-300 to +12,000 m (-1,000 to +40,000 ft)

Environmental Contamination Level
Class G3 (Harsh) as defined in ISA Standard S71.04

[A] The environmental ranges can be extended by the type of enclosure containing the module. {Refer to the applicable Product Specification Sheet (PSS) which describes the specific enclosure that is to be used.}

PHYSICAL SPECIFICATIONS

Configuration
Single-width processor module. The fault-tolerant version consists of two single-width processor modules with two interconnecting buses (X-bus and Z-bus).

Mass (Maximum)
1.2 kg (2.7 lb) for a single, non-fault-tolerant module.

Mounting
May be placed in any of the following mounting structure slots:
- 1x8 Mounting Structure
- Industrial Enclosures (IE16 and IE32)
- Field Enclosure 8

In the fault-tolerant version, the two modules must be mounted in adjacent mounting structure slots with the two interconnecting buses.