SIEMENS SIEPORTAL - EXACT PRODUCT DATA

6DR5010-0EN01-0AA0

SIPART PS2 2-wire without HART, single-acting

SIPART PS2 Smart electropneumatic positioner with a 4 to 20 mA setpoint, single-acting pneumatic output, polycarbonate enclosure and non-contacting NCS position detection for linear and part-turn actuators.

Field	Exact-model value
Article number	6DR5010-0EN01-0AA0
Product status	Active Product
Signal / wiring	4 to 20 mA / 2-wire
Communication	Without HART
Actuator action	Single-acting
Position detection	Non-contacting NCS
Housing	Polycarbonate
Net weight	0.9 kg
Commodity code	90328100
Country of origin	France
Product group	4759
Catalog ID	FI01-5
Group code	RL48
eClass	Version 16: 27-22-04-01
UNSPSC	Version 15: 32-15-17-03

Source: Siemens SiePortal exact product record for **6DR5010-0EN01-0AA0**.
https://sieportal.siemens.com/en-ww/products-services/detail/6DR5010-0EN01-0AA0?tree=CatalogTree

The following pages are selected, un-rasterized pages from the Siemens SIPART PS2 instructions. This first page identifies the complete order number to which the selected series instructions are being applied.

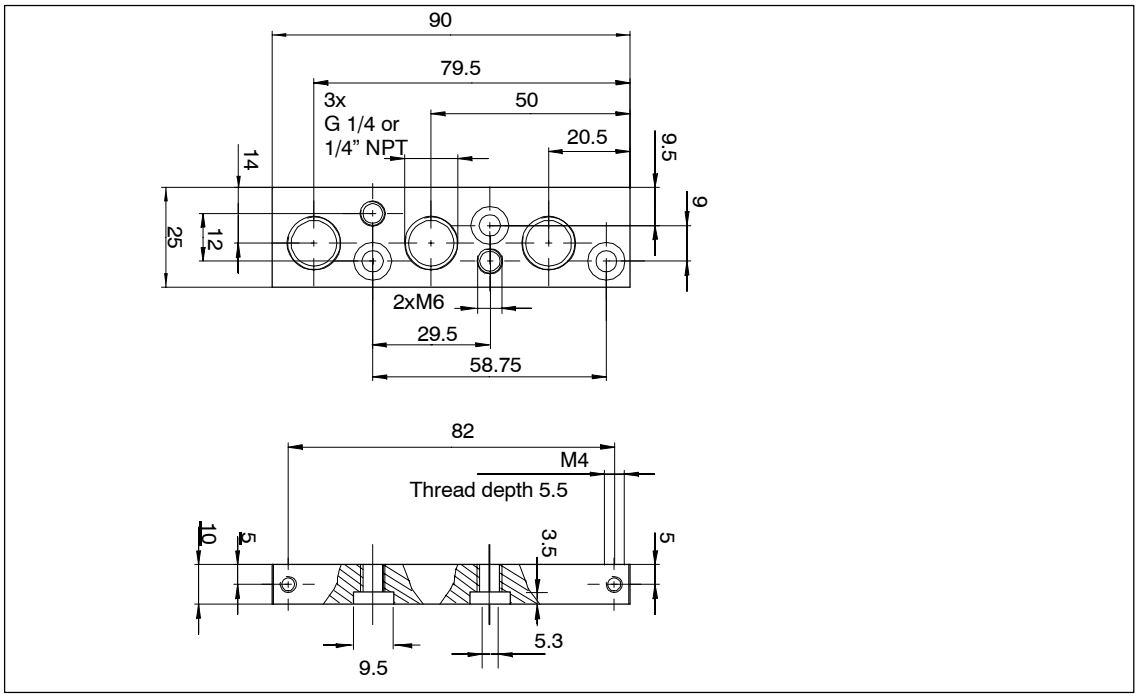

Figure 3-2 Dimensional drawing terminal strip for plastic housing

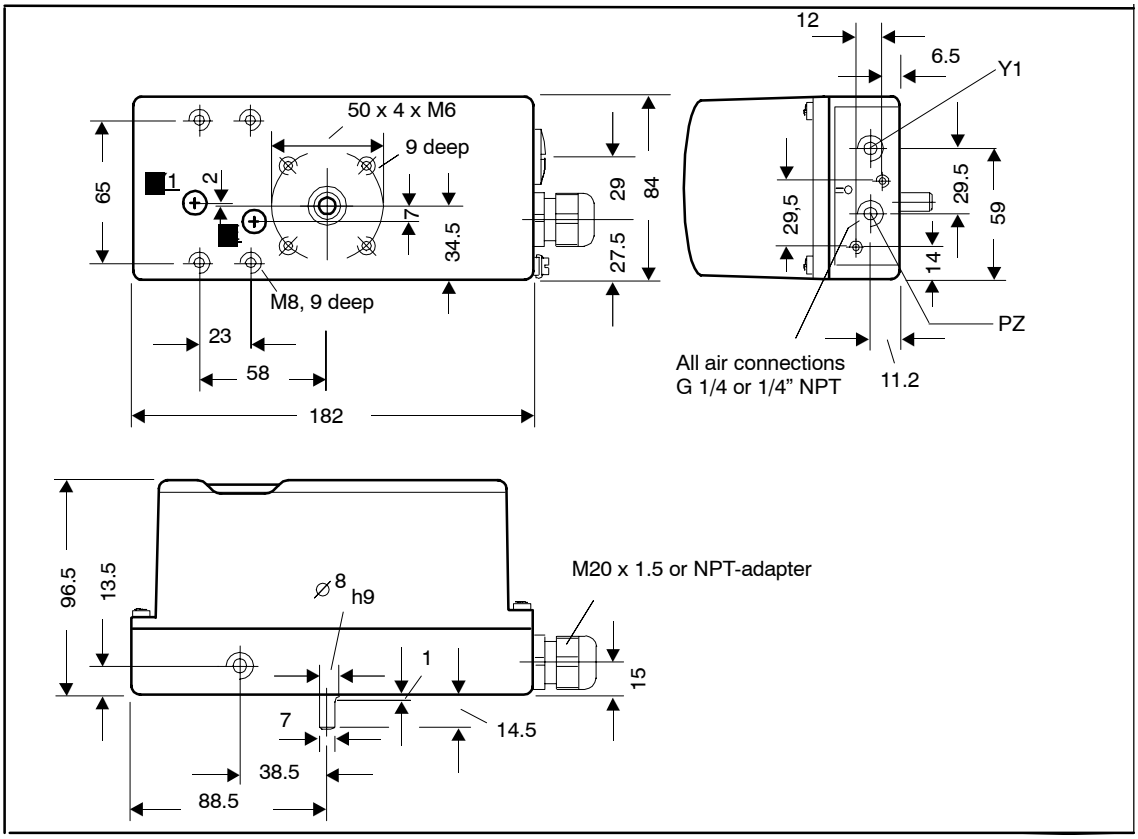

Figure 3-3 Dimensional drawing version metal housing 6DR5xx1

Standard controller

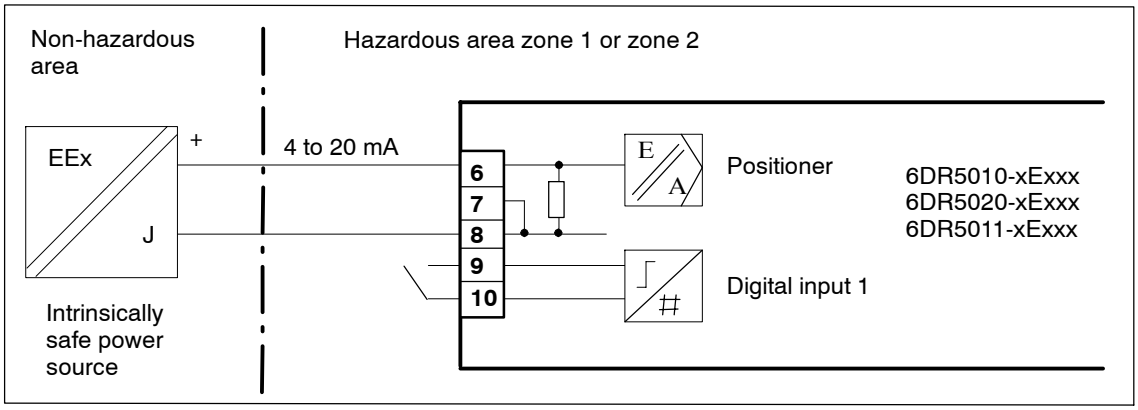

Figure 3-20 Two-wire connection, EEx i

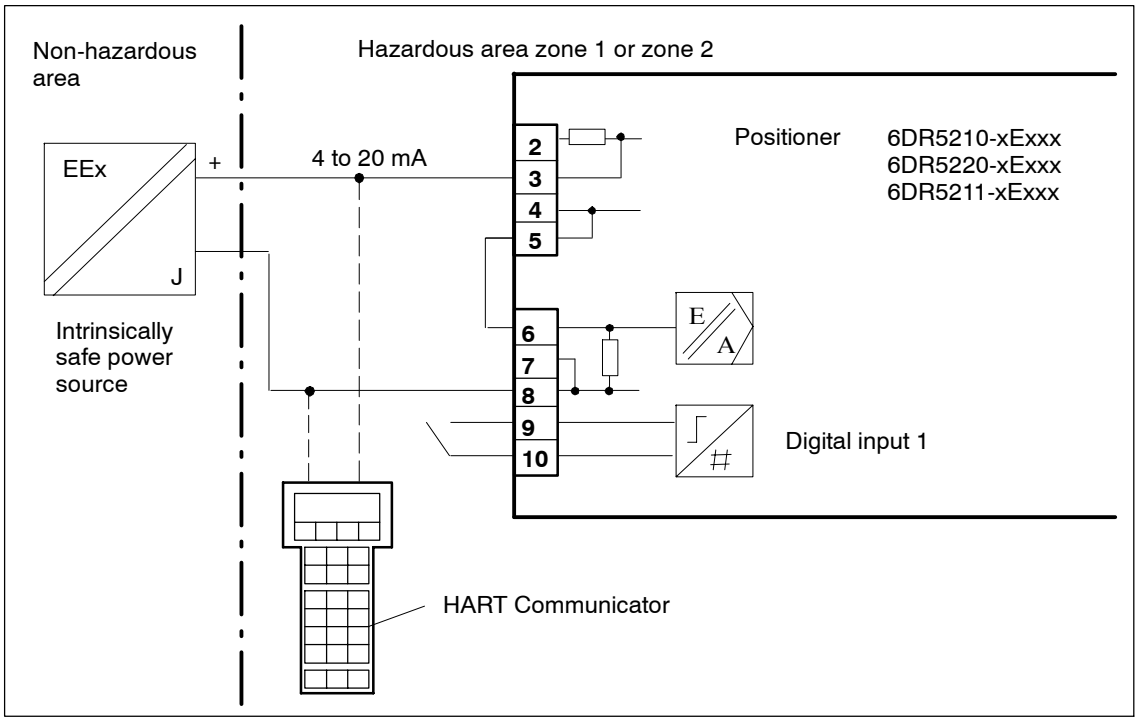

Figure 3-21 Two-wire connection, EEx i

Technical specifications

SIPART PS2 (all versions)	
General data	
Travel range (linear actuators)	3 ... 130 mm (0.12 ... 5.12 inch) (angle of feedback shaft 16 ... 90°)
Angle of rotation (part-turn actuators)	30 ... 100°
Installation	
• On linear actuators	Using attachment set 6DR4004-8V and where necessary with an additional lever arm 6DR4004-8L on actuators according to IEC 534-6 (NAMUR) with ribs, bars or flat face
• On part-turn actuators	Using attachment set 6DR4004-8D on actuators with mounting plane according to VDI/VDE 3845 and DIN 3337: The required mounting console has to be provided on the actuator side; shaft with groove and female thread M6
Controller	
• Five-point switch	Self-adjusting
• Dead zone	
- dEbA = Auto	Self-adjusting or can be set as fixed value
- dEbA = 0.1 ... 10%	Self-adjusting or can be set as fixed value
A/D converter	
• Scan time	10 ms
• Resolution	≤ 0.05%
• Transmission error	≤ 0.2%
• Temperature effect	≤ 0.1%/10 K (≤ 0.1%/18 °F)
Cycle time	
• 20 mA/HART device	20 ms
• PA device	60 ms
• FF device	60 ms (min. loop time)
Binary input BE1 (terminals 9/10; electrically connected to the basic device)	Suitable only for floating contact; max. contact load < 5 mA with 3 V
Degree of protection[1)]	IP66 to EN 60 529/NEMA 4x
Mounting position	Any; pneumatic connections and exhaust opening not facing up in wet environment
CE marking	Conformity as regards EMC Directive 89/336 EC in accordance with the following standards
EMC requirements	EN 61326/A1 Appendix A.1 and NAMUR NE21 August 98
Material	
• Housing	
- 6DR5..0-... (plastic)	Glass-fiber-reinforced Macrolon
- 6DR5..1-... (metal)	GD AlSi12
- 6DR5..2-... (stainless steel)	Austenitic stainless steel mat. No. 1.4581
- 6DR5..5-... (metal, pressure-proof)	GK AlSi12
• Pressure gauge block	Aluminium AlMgSi, anodized
Vibration resistance	
• Harmonic oscillations (sine-wave) according to DIN EN 60062-2-6/05.96	3.5 mm (0.14 inch), 2 ... 27 Hz 3 cycles/axis
	98.1 m/s² (321.84 ft/s²), 27 ... 300 Hz, 3 cycles/axis
• Bumping (half-sine) to DIN EN 60068-2-29/03.95	150 m/s² (492 ft/s²), 6 ms, 1000 shocks/axis
• Noise (digitally controlled) to DIN EN 60068-2-64/08.95	10 ... 200 Hz; 1 $(m/s^2)^2$/Hz ($3.28\ (ft/s^2)^2$/Hz)
	200 ... 500 Hz; 0.3 $(m/s^2)^2$/Hz ($0.98\ (ft/s^2)^2$/Hz)
	4 hours/axis
• Recommended continuous duty range of the complete fitting	≤ 30 m/s² (≤ 98.4 ft/s²) without resonance sharpness
Weight, basic device	
• Plastic casing	Approx. 0.9 kg (0.90 kg)
• Metal casing, aluminium	Approx. 1.3 kg (1.30 kg)
• Metal casing, stainless steel	Approx. 3.9 kg (3.90 kg)
• Metal casing EEx d version	Approx. 5.2 kg (11.46 lb)
Dimensions	See Dimensional drawings
Climate class 4	To DIN EN 60721-3-4
• Storage[2)]	1K5, but -40 ... +80 °C (1K5, but -40 ... +176 °F)
• Transport[2)]	2K4, but -40 ... +80 °C (2K4, but -40 ... +176 °F)
• Operation[3)]	4K3, but -30 ... +80 °C (4K3, but -22 ... +176 °F)
Certificate and approvals	
Classification according to pressure equipment directive (DRGL 97/23/EC)	For gases of fluid group 1, complies with requirements of article 3, paragraph 3 (sound engineering practice SEP)
Pneumatic data	
Power supply (inlet air)	
• Pressure	1.4 ... 7 bar (20.3 ... 101.5 psi): Sufficiently greater than max. drive pressure (actuating pressure)
Air quality to ISO 8573-1	
• Solid particle size and density	Class 2
• Pressure dew point	Class 2 (min. 20 K (36 °F) below ambient temperature)
• Oil content	Class 2
Unthrottled flow	
• Inlet air valve (ventilate actuator)[4)]	
- 2 bar (29 psi)	4.1 Nm³/h (18.1 USgpm)
- 4 bar (58 psi)	7.1 Nm³/h (31.3 USgpm)
- 6 bar (87 psi)	9.8 Nm³/h (43.1 USgpm)
• Outlet air valve (ventilate actuator)[4)]	
- 2 bar (29 psi)	8.2 Nm³/h (36.1 USgpm)
- 4 bar (58 psi)	13.7 Nm³/h (60.3 USgpm)
- 6 bar (87 psi)	19.2 Nm³/h (84.5 USgpm)
Valve leakage	$< 6 \cdot 10^{-4}$ Nm³/h (0.0026 USgpm)
Throttle ratio	Adjustable up to ∞ : 1
Power consumption in the controlled state	$< 3.6 \cdot 10^{-2}$ Nm³/h (0.158 USgpm)
Types of actuators	
• In plastic casing	Single-action and double-action
• In aluminium casing	Single-action
• In flameproof casing	Single-action and double-action
• In stainless steel casing	Single-action and double-action

1) Impact energy max. 1 Joule for plastic/aluminium casing.
2) During commissioning at ≤ 0 °C (≤ 32 °F) make sure that the valves are flushed long enough with the dry medium.
3) At ≤ -10 °C (14 °F) the display refresh rate of the LCD is limited. Only T4 is permissible when using I_y module.
4) With EEx d version (6DR5..5-...) the values are reduced by approx. 20%

Technical specifications

SIPART PS2	Basic device without Ex protection	Basic device with EEx-d protection (flameproof casing)	Basic device with EEx ia/ib protection	Basic device with EEx n protection
Explosion protection to EN 50014, EN 50020 and EN 50021	Without	EEx d II 2 G EEx d II C T6	EEx ia/ib II 2 G EEx ia/ib II C T6	EEx n II 3 G EEx nA L [L] II C T6
Mounting location		Zone 1	Zone 1	Zone 2
Permissible ambient temperature for operation At ≤ -10 °C (+14 °F) the display refresh rate of the LCD is limited. (for basic devices with EEX ia/ib and EEx n protection the following applies: Only T4 is permissible when using I_y module.)	-30 ... +80 °C (-22 ... +176 °F)	T4: -30 ... +80 °C (-22 ... +176 °F) T5: -30 ... +65 °C (-22 ... +149 °F) T6: -30 ... +50 °C (-22 ... +122 °F)		
Electrical data				
Input				
2-wire connection (terminals 6/8)				
Rated signal range	4 ... 20 mA	4 ... 20 mA	4 ... 20 mA	4 ... 20 mA
Current to maintain the power supply	≥ 3.6 mA	≥ 3.6 mA	≥ 3.6 mA	≥ 3.6 mA
Required load voltage U_B (corresponds to Ω at 20 mA)				
• Without HART (6DR50..)				
- Typical	6.36 V (corresponds to 318 Ω)	6.36 V (corresponds to 318 Ω)	7.8 V (corresponds to 390 Ω)	7.8 V (corresponds to 390 Ω)
- Max.	6.48 V (corresponds to 324 Ω)	6.48 V (corresponds to 324 Ω)	8.3 V (corresponds to 415 Ω)	8.3 V (corresponds to 415 Ω)
• Without HART (6DR53..)				
- Typical	7.9 V (corresponds to 395 Ω)	–	–	–
- Max.	8.4 V (corresponds to 420 Ω)	–	–	–
• With HART (6DR51..)				
- Typical	6.6 V (corresponds to 330 Ω)	6.6 V (corresponds to 330 Ω)	–	–
- Max.	6.72 V (corresponds to 336 Ω)	6.72 V (corresponds to 336 Ω)	–	–
• With HART (6DR52..)				
- Typical	–	8.4 V (corresponds to 420 Ω)	8.4 V (corresponds to 420 Ω)	8.4 V (corresponds to 420 Ω)
- Max.	–	8.8 V (corresponds to 440 Ω)	8.8 V (corresponds to 440 Ω)	8.8 V (corresponds to 440 Ω)
• Static destruction limit	± 40 mA		–	–
Internal capacitance C_i				
• Without HART	–	–	≤ 22 nF	–
• With HART	–	–	≤ 7 nF	–
Internal inductance L_i				
• Without HART	–	–	≤ 0.12 mH	–
• With HART	–	–	≤ 0.24 mH	–
For connection to power circuits with	–	–	intrinsically safe U_o ≤ 30 V DC I_k ≤ 100 mA P ≤ 1 W	U_i ≤ 30 V DC I_i ≤ 100 mA

SIPART PS2	Basic device without Ex protection	Basic device with EEx-d protection (flameproof casing)	Basic device with EEx ia/ib protection	Basic device with EEx n protection
3-/4-wire device (terminals 2/4 and 6/8) (6DR52.. and 6DR53..)				
• Power supply U_H	18 ... 35 V DC	18 ... 35 V DC	18 ... 30 V DC	18 ... 30 V DC
• Current consumption I_H	(U_H - 7.5 V)/2.4 kΩ [mA]	(U_H - 7.5 V)/2.4 kΩ [mA]	(U_H - 7.5 V)/2.4 kΩ [mA]	(U_H - 7.5 V)/2.4 kΩ [mA]
• Internal capacitance C_i	–	–	≤ 22 nF	–
• Internal inductance L_i	–	–	≤ 0.12 mH	–
• For connection to power circuits with	–	–	intrinsically safe U_o ≤ 30 V DC I_k ≤ 100 mA P ≤ 1 W	U_i ≤ 30 V DC I_i ≤ 100 mA
Current input I_W				
Rated signal range	0/4 ... 20 mA	0/4 ... 20 mA	0/4 ... 20 mA	0/4 ... 20 mA
Load voltage at 20 mA	≤ 0.2 V (corresponds to 10 Ω)	≤ 0.2 V (corresponds to 10 Ω)	≤ 1 V (corresponds to 50 Ω)	≤ 1 V (corresponds to 50 Ω)
Internal capacitance C_i	–	–	≤ 22 nF	–
Internal inductance (L_i)	–	–	≤ 0.12 mH	–
For connection to power circuits with	–	–	intrinsically safe U_o ≤ 30 V DC I_k ≤ 100 mA P ≤ 1 W	U_i ≤ 30 V DC I_i ≤ 100 mA
Electrical isolation	between U_H and I_W	between U_H and I_W	between U_H and I_W (2 intrinsically safe circuits)	between U_H and I_W
Test voltage	840 V DC (1 s)	840 V DC (1 s)	840 V DC (1 s)	840 V DC (1 s)
Connections				
• Electric	Screw terminals 2.5 AWG28-12 Cable gland M20 x 1.5 or ½-14 NPT	Screw terminals 2.5 AWG28-12 EEx d certified cable gland M20 x 1.5, ½-14 NPT or M25 x 1.5	Screw terminals 2.5 AWG28-12 Cable gland M20 x 1.5 or ½-14 NPT	Screw terminals 2.5 AWG28-12 Cable gland M20 x 1.5 or ½-14 NPT
• Pneumatic	Female thread G¼ DIN 45141 or ¼-18 NPT	Female thread G¼ DIN 45141 or ¼-18 NPT	Female thread G¼ DIN 45141 or ¼-18 NPT	Female thread G¼ DIN 45141 or ¼-18 NPT
External position sensor (potentiometer or NCS; as option)				
• U_o	–	–	< 5 V	< 5 V
• I_o	–	–	< 75 mA	< 75 mA
• I_s	–	–	<160 mA	<160 mA
• P_o	–	–	<120 mW	<120 mW
Maximum permissible external capacitance C_o	–	–	< 1 µF	< 1 µF
Maximum permissible external inductance L_o	–	–	< 1 mH	< 1 mH

7.1 Scope of delivery of standard controller

Versions	Housing	Valve	Ex-protection	Order numbers
SIPART PS2 2L without HART	Plastic housing	single action	non Ex	6DR5010-xNxxx-0AA0
	Plastic housing	double action	non Ex	6DR5020-xNxxx-0AA0
	Metal housing	single action	non Ex	6DR5011-xNxxx-0AA0
SIPART PS2 2L without HART	Plastic housing	single action	CENELEC/FM	6DR5010-xExxx-0AA0
	Plastic housing	double action	CENELEC/FM	6DR5020-xExxx-0AA0
	Metal housing	single action	CENELEC/FM	6DR5011-xExxx-0AA0
	Explosion proof housing	single action	CENELEC/FM	6DR5015-xExxx-0AA0
	Explosion proof housing	double action	CENELEC/FM	6DR5025-xExxx-0AA0
SIPART PS2 2L with HART	Plastic housing	single action	non Ex	6DR5110-xNxxx-0AA0
	Plastic housing	double action	non Ex	6DR5120-xNxxx-0AA0
	Metal housing	single action	non Ex	6DR5111-xNxxx-0AA0
SIPART PS2 4L with HART	Plastic housing	single action	CENELEC/FM	6DR5210-xExxx-0AA0
	Plastic housing	double action	CENELEC/FM	6DR5220-xExxx-0AA0
	Metal housing	single action	CENELEC/FM	6DR5211-xExxx-0AA0
	Explosion proof housing	single action	CENELEC/FM	6DR5215-xExxx-0AA0
	Explosion proof housing	double action	CENELEC/FM	6DR5225-xExxx-0AA0
SIPART PS2 4L without HART	Plastic housing	single action	non Ex	6DR5310-xNxxx-0AA0
	Plastic housing	double action	non Ex	6DR5320-xNxxx-0AA0
	Metal housing	single action	non Ex	6DR5311-xNxxx-0AA0

2L corresponds to two-wire operation
4L corresponds to four-wire-operation
–x stands for sub-variant

7.2 Scope of delivery of options

Option	Order number
I_y- module without protection against explosion	6DR4004-8J
I_y- module with protection against explosion PTB [1)] I_y- module with protection against explosion FM[2)]	6DR4004-6J 6DR4004-7J
Alarm unit without protection against explosion	6DR4004-8A
Alarm unit with protection against explosion PTB [1)] Alarm unit with protection against explosion FM [2)]	6DR4004-6A 6DR4004-7A
SIA-module without protection against explosion	6DR4004-8G
SIA-module with protection against explosion CENELEC and FM [1)2)]	6DR4004-6G
Limit-contact module without protection against explosion	6DR4004-8K
Limit-switch module with protection against explosion CENELEC and FM [1)2)3)]	6DR4004-6K

1) EC-type examination certificate
2) Approval Reports from Factory Mutual System
3) In preparation