Apter Power

Technical Data

Original Instructions

Allen-Bradley
by ROCKWELL AUTOMATION

1769 Compact I/O Modules Specifications

Catalog Numbers

Digital I/O Modules	1769-IA8I, 1769-IA8IK, 1769-IA16, 1769-IA16K, 1769-IM12, 1769-OA8, 1769-OA16, 1769-OA16K, 1769-IG16, 1769-IQ16, 1769-IQ16K, 1769-IQ16F, 1769-IQ32, 1769-IQ32K, 1769-IQ32T, 1769-IQ6XOW4, 1769-OB8, 1769-OB8K, 1769-OB16, 1769-OB16K, 1769-OB16P, 1769-OB32, 1769-OB32K, 1769-OB32T, 1769-OG16, 1769-OV16, 1769-OV32T
Contact I/O Modules	1769-OW8, 1769-OW8I, 1769-OW8IK, 1769-OW16, 1769-OW16K
Analog I/O Modules	1769-IF4, IF4K, 1769-IF4I, 1769-IF4XOF2, 1769-IF4XOF2K, 1769-IF4FXOF2F, 1769-IF8, 1769-IF8K, 1769-IF16C, 1769-IF16V, 1769-IR6, 1769-IT6, 1769-OF2, 1769-OF2K, 1769-OF4, 1769-OF4K, 1769-OF4CI, 1769-OF4VI, 1769-OF8C, 1769-OF8V
Specialty Modules	1769-ARM, 1769-ASCII, 1769-BOOLEAN, 1769-HSC, 1769-SM2
Accessories	1769-ECL, 1769-ECLK, 1769-ECR, 1769-ECRK, 1769-ECL, 1769-ECLK, 1769-ECR, 1769-ECRK, 1769-CLL1, 1769-CRR1, 1769-CRL1, 1769-CLL3, 1769-CRR3, 1769-CRL3

Topic	Page
Summary of Changes	2
I/O Module Overview	2
Environmental Specifications	2
Certifications	3
Place Compact I/O Modules	4
Digital I/O Modules	5
Contact I/O Modules	25
Analog I/O Modules	29
Specialty I/O Modules	53
Compact I/O Mounting Dimensions	61
Compact I/O Accessories	61
Wiring Systems	64
Additional Resources	65

The 1769 Compact I/O™ modules can be used in these applications:

- With a 1769 CompactLogix™ controller
- For expansion I/O in a MicroLogix™ 1500 controller assembly
- In an assembly with a 1769-ADN DeviceNet® adapter
- In an assembly with a 1769-AENTR Ethernet adapter

Unless connected to a MicroLogix 1500 base, each bank of I/O modules must include its own power supply.

Install the I/O modules on a panel with two mounting screws or on a DIN rail. The modules mechanically lock together with a tongue-and-groove design and have an integrated communication bus that is connected from module to module by a movable bus connector.

Apter Power

Summary of Changes

This publication contains the following new or updated information. This list includes substantive updates only and is not intended to reflect all changes.

Topic	Page
Added modules: 1769-IA16K, 1769-IA8IK, 1769-IF4K, 1769-IF4XOF2K, 1769-IF8K, 1769-IQ16K, 1769-IQ32K, 1769-OA16K, 1769-OB16K, 1769-OB32K, 1769-OB8K, 1769-OF2K, 1769-OF4K, 1769-OW16K, 1769-OW8IK, 1769-SM2	Throughout
Updated certifications	3

I/O Module Overview

Each I/O module includes a built-in removable terminal block with fingersafe cover for connections to I/O sensors and actuators. The terminal block is behind a door at the front of the module. I/O wiring can be routed from beneath the module to the I/O terminals.

- Once the modules are locked together, the system becomes a rugged assembly.
- Upper and lower tongue-and-groove slots guide the module during installation and attach the module to the system.
- Removable terminal blocks help ease the wiring task.
- Self-lifting, field-wire pressure plates cut installation time.
- The patented bus connector with the lock function enables consistent and system communication.
- A color bar is provided on the front of the module.
- Digital and field circuits are optically isolated.

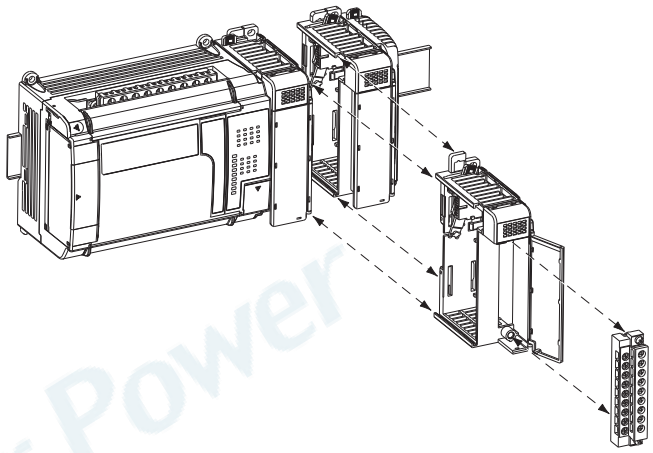

Environmental Specifications(1)

Attribute	1769-IA8I, 1769-IA8IK, 1769-IA16, 1769-IA16K, 1769-IF4, 1769-IF4K, 1769-IF4XOF2, 1769-IF4XOF2K, 1769-IM12, 1769-IQ16, 1769-IQ16K, 1769-IQ16F, 1769-IQ32, 1769-IQ32K, 1769-IQ6XOW4, 1769-IR6, 1769-IT6, 1769-OA8, 1769-OA16, 1769-OA16K, 1769-OB8, 1769-OB8K, 1769-OB16, 1769-OB16K, 1769-OB16P, 1769-OB32, 1769-OB32K, 1769-OV16, 1769-OW8, 1769-OW8I, 1769-OW8IK, 1769-OW16, 1769-OW16K, 1769-ARM, 1756-HSC	1769-IG16, 1769-IF4FXOF2F, 1769-IF4I, 1769-IF8, 1769-IF8K, 1769-IF16C, 1769-IF16V, 1769-IQ32T, 1769-OB32T, 1769-OG16, 1769-OV32T, 1769-OF2, 1769-OF2K, 1769-OF4, 1769-OF4K, 1769-OF4CI, 1769-OF4VI, 1769-OF8C, 1769-OF8V, 1769-ASCII, 1769-BOOLEAN
Temperature, operating IEC 60068-2-1 (Test Ad, Operating Cold), IEC 60068-2-2 (Test Bd, Operating Dry Heat), IEC 60068-2-14 (Test Nb, Operating Thermal Shock)	0...60 °C (32...140 °F)	
Temperature, nonoperating IEC 60068-2-1 (Test Allen-Bradley®, Unpackaged Nonoperating Cold), IEC 60068-2-2 (Test Bb, Unpackaged Nonoperating Dry Heat), IEC 60068-2-14 (Test Na, Unpackaged Nonoperating Thermal Shock)	-40...+85 °C (-40...+185 °F)	
Relative humidity IEC 60068-2-30 (Test Db, Unpackaged Nonoperating Damp Heat)	5...95% noncondensing	
Vibration IEC 60068-2-6 (Test Fc, Operating)	Operating: 5 g @ 10...500 Hz Relay operating: 2 g	5 g @ 10...500 Hz
Shock, operating IEC 60068-2-27 (Test Ea, Unpackaged Shock)	Panel mount 30 g DIN rail mount 20 g	
Shock, relay operating IEC 60068-2-27 (Test Ea, Unpackaged Shock)	Panel mount 7.5 g DIN rail mount 5 g	–
Shock, nonoperating IEC 60068-2-27 (Test Ea, Unpackaged Shock)	Panel mount 40 g DIN rail mount 30 g	

(1) Environmental Specifications for the 1769-SM2 module are found on page 60.

Certifications

Certifications - 1769 Compact I/O Digital and Contact Modules

Certification[1]	1769-IA8I, 1769-IA8IK, 1769-IA16, 1769-IA16K, 1769-OA8, 1769-OA16, 1769-OA16K, 1769-OW8, 1769-OW8I, 1769-OW8IK, 1769-OW16, 1769-OW16K	1769-IM12, 1769-IQ6XOW4	1769-IG16, 1769-IQ16, 1769-IQ16K, 1769-IQ16F, 1769-IQ32, 1769-IQ32K, 1769-IQ32T, 1769-OB8, 1769-OB8K, 1769-OB16, 1769-OB16K, 1769-OB16P, 1769-OB32, 1769-OB32K, 1769-OB32T, 1769-OG16, 1769-OV16, 1769-OV32T
c-UL-us	UL Listed for Class I, Division 2 Group A,B,C,D Hazardous Locations, certified for U.S. and Canada. See UL File E334470.		
UKCA and CE	UK Statutory Instrument 2016 No. 1101 and European Union 2014/35/EU LVD Directive, compliant with: EN 61131-2; Programmable Controllers (pertinent LVD sections only) UK Statutory Instrument 2016 No. 1091 and European Union 2014/30/EU EMC Directive, compliant with: EN 61000-6-2; Industrial Immunity EN 61000-6-4; Industrial Emissions UK Statutory Instrument 2012 No. 3032 and European Union 2011/65/EU RoHS Directive, compliant with: EN IEC 63000; Technical Documentation		UK Statutory Instrument 2016 No. 1091 and European Union 2014/30/EU EMC Directive, compliant with: EN 61000-6-2; Industrial Immunity EN 61000-6-4; Industrial Emissions UK Statutory Instrument 2012 No. 3032 and European Union 2011/65/EU RoHS, compliant with: EN IEC 63000; Technical Documentation
RCM	Australian Radiocommunications Act, compliant with: EN 61000-6-4; Industrial Emissions		
KC	Korean Registration of Broadcasting and Communications Equipment, compliant with: Article 58-2 of Radio Waves Act, Clause 3		
Morocco	Arrêté ministériel n° 6404-15 du 1 er muharram 1437 Arrêté ministériel n° 6404-15 du 29 ramadan 1436		

(1) When marked. See the Product Certification link at rok.auto/certifications for Declarations of Conformity, Certificates, and other certification details.

Certifications - 1769 Compact I/O Analog Modules

Certification[1]	1769-IF4, 1769-IF4K, 1769-IF4XOF2, 1769-IF4XOF2K, 1769-IF4FXOF2F, 1769-IF8, 1769-IF8K, 1769-OF2, 1769-OF2K	1769-IF4I, 1769-IT6, 1769-OF4CI, 1769-OF4VI, 1769-OF8C, 1769-OF8V	1769-IF16C, 1769-IF16V	1769-IR6	1769-OF4, 1769-OF4K
c-UL-us	UL Listed for Class I, Division 2 Group A,B,C,D Hazardous Locations, certified for U.S. and Canada. See UL File E334470.	UL Listed Industrial Control Equipment, certified for US and Canada. See UL File E65584. UL Listed for Class I, Division 2 Group A,B,C,D Hazardous Locations, certified for U.S. and Canada. See UL File E194810.	UL Listed Industrial Control Equipment, certified for US and Canada. See UL File E10314. UL Listed for Class I, Division 2 Group A,B,C,D Hazardous Locations, certified for U.S. and Canada. See UL File E10314.	UL Listed for Class I, Division 2 Group A,B,C,D Hazardous Locations, certified for U.S. and Canada. See UL File E194810.	UL Listed Industrial Control Equipment, certified for US and Canada. See UL File E322657. UL Listed for Class I, Division 2 Group A,B,C,D Hazardous Locations, certified for U.S. and Canada. See UL File E334470.
UKCA and CE	UK Statutory Instrument 2016 No. 1091 and European Union 2014/30/EU EMC Directive, compliant with: EN 61000-6-2; Industrial Immunity EN 61000-6-4; Industrial Emissions UK Statutory Instrument 2012 No. 3032 and European Union 2011/65/EU RoHS, compliant with: EN IEC 63000; Technical documentation				
RCM	Australian Radiocommunications Act, compliant with: EN 61000-6-4; Industrial Emissions				
KC	Korean Registration of Broadcasting and Communications Equipment, compliant with: Article 58-2 of Radio Waves Act, Clause 3				
Morocco	Arrêté ministériel n° 6404-15 du 1 er muharram 1437 Arrêté ministériel n° 6404-15 du 29 ramadan 1436				

(1) When marked. See the Product Certification link at rok.auto/certifications for Declarations of Conformity, Certificates, and other certification details.

Certifications - Specialty Modules

Certification[1]	1769-ARM, 1769-ASCII, 1769-BOOLEAN	1769-HSC	1769-SM2[2][3]
c-UL-us	UL Listed for Class I, Division 2 Group A,B,C,D Hazardous Locations, certified for U.S. and Canada. See UL File E334470.	UL Listed Industrial Control Equipment, certified for US and Canada. See UL File E322657. UL Listed for Class I, Division 2 Group A,B,C,D Hazardous Locations, certified for U.S. and Canada. See UL File E334470.	UL Listed Industrial Control Equipment, certified for US and Canada. See UL File E59272.
UKCA and CE	UK Statutory Instrument 2016 No. 1091 and European Union 2014/30/EU EMC Directive, compliant with: EN 61000-6-2; Industrial Immunity EN 61000-6-4; Industrial Emissions UK Statutory Instrument 2012 No. 3032 and European Union 2011/65/EU RoHS, compliant with: EN IEC 63000; Technical documentation		
RCM	Australian Radiocommunications Act, compliant with: EN 61000-6-4; Industrial Emissions		
KC	Korean Registration of Broadcasting and Communications Equipment, compliant with: Article 58-2 of Radio Waves Act, Clause 3		
Morocco	Arrêté ministériel n° 6404-15 du 1 er muharram 1437 Arrêté ministériel n° 6404-15 du 29 ramadan 1436		

(1) When marked. See the Product Certification link at rok.auto/certifications for Declarations of Conformity, Certificates, and other certification details.
(2) In a domestic environment, this product can cause radio interference in which case supplementary mitigation measures can be required.
(3) To remain CE, a ferrite core (Fair-Rite part number 2643102002) must be added to DSI communication cables longer than 10 m (33 ft.), and the core must be attached within 305 mm (12 in.) of the 1769-SM2 module.

1769-IQ32, 1769-IQ32K

Compact 24V DC sink/source input module

Input wiring

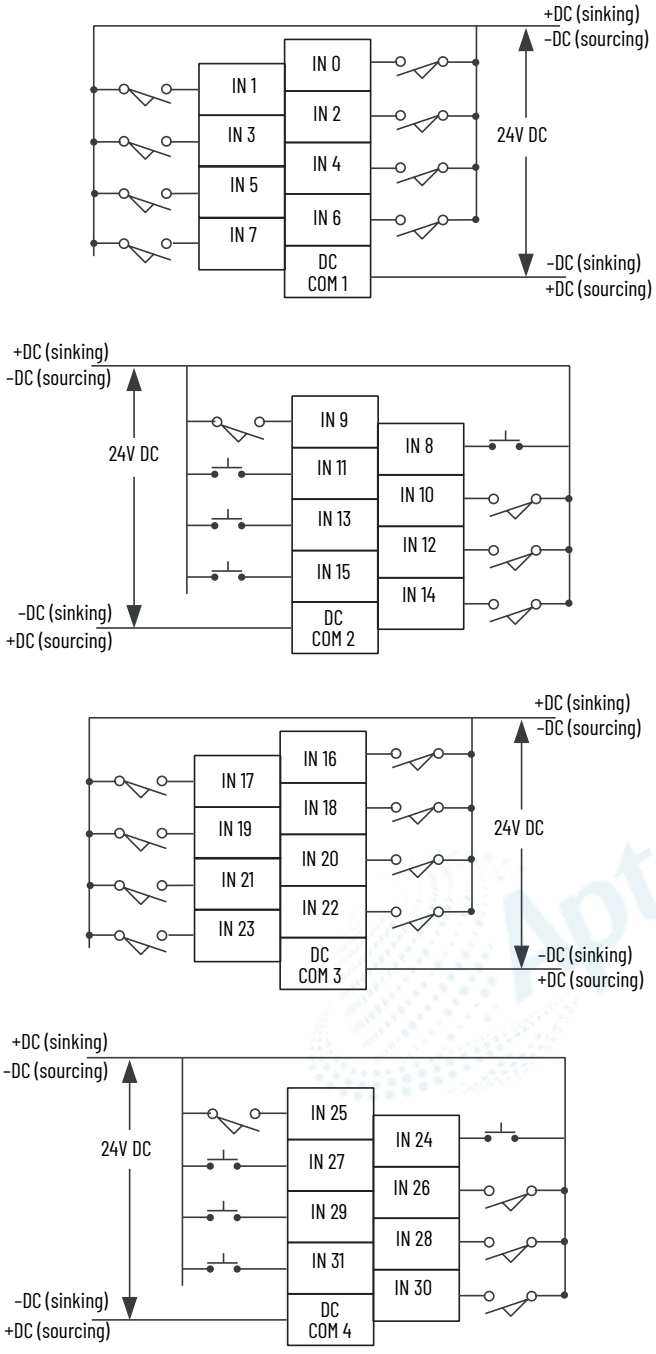

Technical Specifications - 1769-IQ32, 1769-IQ32K

Attribute	1769-IQ32, 1769-IQ32K
Inputs	32 (8 points/group)
Voltage category	24V DC sink/source
Operating voltage range	10...30V DC @ 30 °C (86 °F) 10...26.4V DC @ 60 °C (140 °F)
Input delay, on	8 ms
Input delay, off	8 ms
Current draw @ 5.1V	170 mA
Heat dissipation, max	4.6 W
Off-state voltage, max	5V DC
Off-state current, max	1.5 mA
On-state voltage, min	10V DC
On-state current, min	2 mA
Inrush current, max	250 mA
Input impedance, nominal	5.2 kW @ 24V DC 6.1 kW @ 30V DC
Isolation voltage	Verified by one of these dielectric tests: 1200V AC for 1 s or 1697V DC for 1 s, input point to bus and group to group 75V DC working voltage (IEC Class II reinforced insulation)
Weight, approx	440 g (0.97 lb)
Dimensions (HxWxD), approx	118 x 52.5 x 87 mm (4.65 x 2.07 x 3.43 in.) Height with mounting tabs 138 mm (5.43 in.)
Slot width	1.5
Module location	DIN rail or panel mount
Power supply	1769-PA2, 1769-PB2, 1769-PA4, 1769-PB4
Power supply distance rating	8 modules
Terminal screw torque	0.68 N•m (6 lb•in)
Retaining screw torque	0.46 N•m (4.1 lb•in)
Wire size	(22...14 AWG) solid (22...16 AWG) stranded
Wire type	Cu-90 °C (194 °F)
IEC input compatibility	Type 1+
Replacement terminal block	1769-RTBN18 (1 per kit)
Replacement door	Not available
Vendor ID code	1
Product type code	7
Product code	68
Enclosure type rating	None (open-style)

For **Environmental Specifications**, see page 2.

For **Certifications**, see page 3.