Apter Power

Foxboro Evo™ Process Automation System Hardware

Product Specifications

Foxboro by Schneider Electric

PSS 31H-2S204

FBM204, 0 to 20 mA I/O Module



The FBM204, 0 to 20 mA Input/Output contains four 20 mA dc analog input channels and four 20 mA dc analog output channels.

OVERVIEW

The FBM204, 0 to 20 mA Input/Output module contains four 0 to 20 mA dc analog input channels and four 0 to 20 mA dc analog output channels. Each input channel accepts an analog sensor input such as a 4 to 20 mA transmitter, or a self-powered 20 mA source. Each output channel drives an external load and produces a 0 to 20 mA output. The inputs/outputs are galvanically isolated from other channels and ground.

The FBM204 performs the signal conversion required to interface the electrical input/output signals from the field sensors to the optionally redundant fieldbus.

The FBM204 executes the Analog I/O application program, which provides the following configurable options: Conversion Time, Fail-Safe Configuration (Hold/Fallback), and Analog Output Fail-Safe Fallback Data (on a per channel basis). When used with I/A Series® software v8.6 to v8.8 or Foxboro Evo™ Control Core Services software v9.0 or later, the FBM may instead execute a distributed PIDA (DPIDA) application program to provide a fast control loop running in it.

The FBM204 is electrically compatible with standard HART signals.

FUNCTIONAL SPECIFICATIONS - TERMINATION ASSEMBLIES

FBM Type	Input		Output		TA Part No.(a)	Termination Type(b)	TA Cable Type(c)	TA Cert. Type (d)
	Qty.	Signal	Qty.	Signal	PA			
FBM204	4	0 to 20 mA	4	0 to 20 mA	RH916XK (supersedes P0916AG, P0916XK)	C	1	1
					P0916AH	RL		
FBM204	4	0 to 20 mA	4	0 to 20 mA	RH917QW (supersedes P0917QW)	C	1	4,5

(a) PA is polyamide rated from -20 to +70°C (-4 to +158°F).
(b) C = TA with compression terminals; RL = TA with ring lug terminals.
(c) See Table 2 for cable part numbers and specifications.
(d) See Table 1 for Termination Assembly certification definitions.

Table 1. Certification for Termination Assemblies

Type	Certification
Type 1	TAs are UL/UL-C listed as suitable for use in Class I; Groups A-D; Division 2 temperature code T4 hazardous locations. They are DEMKO certified EEx nA IIC T4 for use in Zone 2 potentially explosive atmospheres.
Type 4	All field circuits are Class 2 limited energy (60 V dc, 30 V ac, 100 VA or less) if customer-supplied equipment meets Class 2 limits.
Type 5	The TA and its field circuitry are for use in only ordinary (non-hazardous) locations.

Table 2. Cables Types and Part Numbers

Cable Length m (ft)	Type 1 P/PVC (a)	Type 1 LSZH (b)
0.5 (1.6)	RH916DA (supersedes P0916DA)	RH928AA (supersedes P0928AA
1.0 (3.2)	RH916DB (supersedes P0916DB)	RH928AB (supersedes P0928AB)

DIMENSIONS–NOMINAL

mm
in

RH916XK (supersedes P0916XK, P0916AG)

Compression

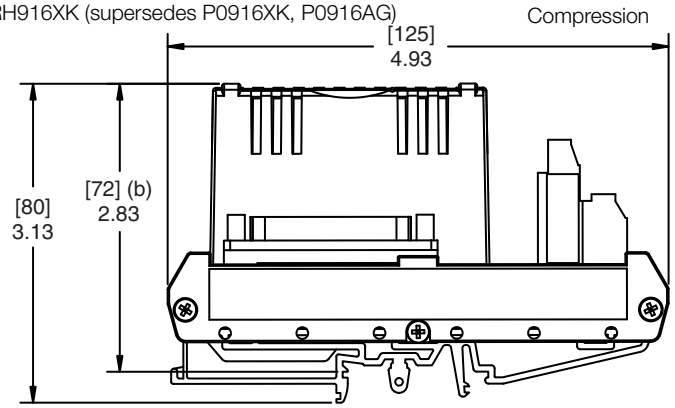

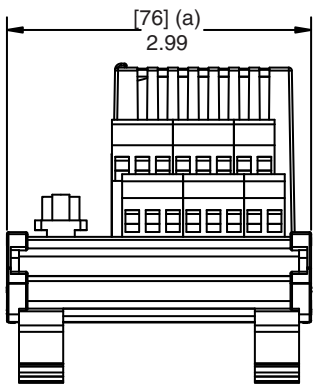

RH917QW (supersedes P0917QW)

Ring Lug

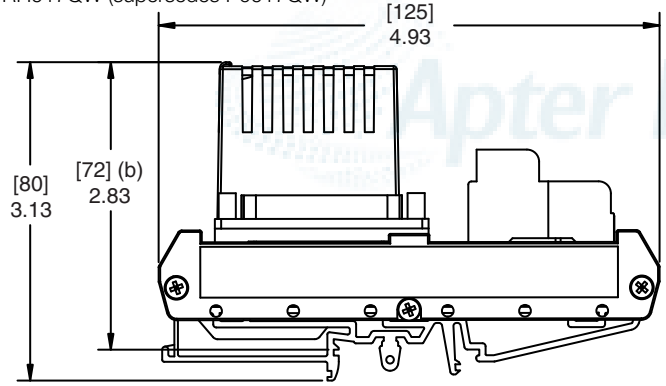

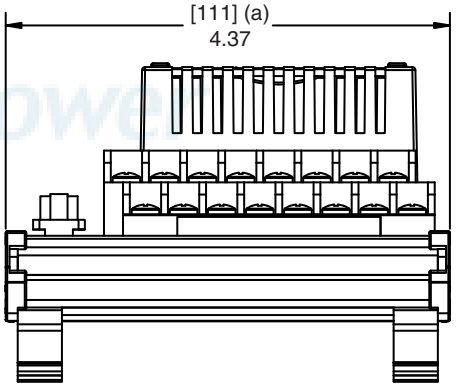

(a) Overall width – for determining DIN rail loading.
(b) Height above DIN rail (add to DIN rail height for total).