5/24 Volt DC (TTL) Negative Logic Output, 32 Point IC693MDL752

The ***5/24 volt DC (TTL) Negative Logic Output*** module for the Series 90-30 Programmable Logic Controller provides 32 discrete outputs. The outputs are arranged in four isolated groups of eight (A1 - A8, B1 - B8, C1 - C8, and D1 - D8); each group has its own common. The outputs are negative logic or sinking type outputs (i.e., the ON state for a point results in an active low output).

The module has two modes of operation. In the TTL mode, the outputs can switch user loads across +5 VDC (±5%) and are capable of sinking a maximum current of 25 mA per point. In the 12/24V mode, the outputs can switch user loads over the range of +12 through –24 VDC (+20%, –15%) and are capable of sinking a maximum current of 0.5A per point. Two pins are provided on the user I/O connectors for each group common. Each pin has a current handling capability of 3 amperes. It is recommended that connections are made to both pins when connecting the common; however, it is a requirement for high current applications (between 3 and 4 amperes).

Each group can be used in the mode of operation needed to satisfy the load requirements for a particular application. For example, group A can drive TTL loads and group B can drive 12 VDC loads, while group C and D can be reserved for driving 24 VDC loads. It is important to note, however that the effects of electrical noise must be considered when mixing TTL and inductive-type loads.

An internal pull-up resistor is provided for each point. The function of each resistor is to passively pull up the output to the user positive side power input (typically +5V for TTL mode) when the output point FET is OFF, thereby providing a high logic level for TTL applications. All 32 outputs are forced OFF when the CPU is stopped. Power to provide current to the loads must be provided by the user. The module also draws a minimum amount of power from the user supply to provide gate drive to the output devices.

Backplane isolation between the field side and logic side is provided by opto-couplers on the module. No special fault or alarm diagnostics are reported. LED indicators (labeled A1 - A8, B1 - B8, C1 - C8, D1 - D8) at the top of the module provide the ON/OFF status of each output point.

This module is configured as a 32-point output type and uses 32 bits of discrete %Q output data. This module can be installed in any I/O slot of a 5 or 10-slot baseplate in a Series 90-30 PLC system.

Connections to the output circuits are made from the user's load devices to two male (pin-type) 24-pin connectors (Fujitsu FCN-365P024-AU) mounted on the front of the module. The connector mounted on the right of the module (front view) interfaces with groups A and B. The connector on the left side of the module interfaces with groups C and D.

Wiring to Field Devices

- **Direct Method** – This method uses cables that have a mating female connector on the module end and stripped and tinned wires on the other end. You can purchase a pair of pre-wired cables, catalog numbers IC693CBL327 and IC693CBL328 or, if required for your application, build your own cables. Refer to *Building Cables for 24-Pin Connectors* in the IC693CBL327/328 data sheet in Appendix C of this manual for more information.
- **Using a TBQC –** The Terminal Block Quick Connect method uses a pair of cables with connectors on each end. These connect from the module connectors to connectors on DIN–rail mounted terminal blocks. The TBQC components are discussed in Appendix D.

Table 7-23. Specifications for IC693MDL752

Rated Voltage	5, and 12 through 24 volts DC, negative logic (active low)
Output Voltage Range	4.75 to 5.25 volts DC (TTL mode) 10.2 to 28.8 volts DC (12/24V mode)
Outputs per Module	32 (four groups of eight outputs each)
Isolation	1500 volts between field side and logic side 250 volts between groups
Output Current	25 mA per point (maximum in TTL mode) 0.5 amps per point (maximum in 12/24V mode); with 4 amps maximum per group and 3 amps maximum per group common pin
Output Characteristics	
Inrush Current	4.6 amps for 10 ms
On-state (active low)	0.4 volts DC (maximum in TTL mode)
Voltage Drop	0.24 volts DC (maximum in 12/24V mode)
Off-state Leakage Current	0.1 mA maximum
On Response Time	0.5 ms maximum
Off Response Time	0.5 ms maximum
Internal Power Consumption	260 mA (maximum) from 5 volt bus on backplane; (13 mA + 3 mA/point ON + 4.7 mA/LED)
	12 mA (maximum) per group from user supply @ 5VDC and all eight outputs in group ON
	25 mA (maximum) per group from user supply @ 12 VDC and all eight outputs in group ON
	44 mA (maximum) per group from user supply @ 24 VDC and all eight outputs in group ON

Refer to Appendix B for product standards and general specifications.

IC693MDL752 Output Module Field Wiring Information

The following three figures provide wiring information for connecting user supplied load devices and power source to the 5/24 volt DC negative logic output module.

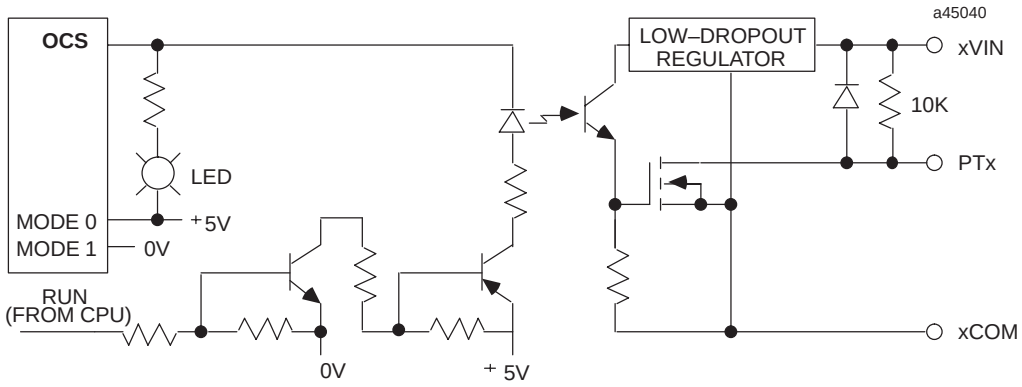

Module point numbers in the following figure are shown in **bold** text.

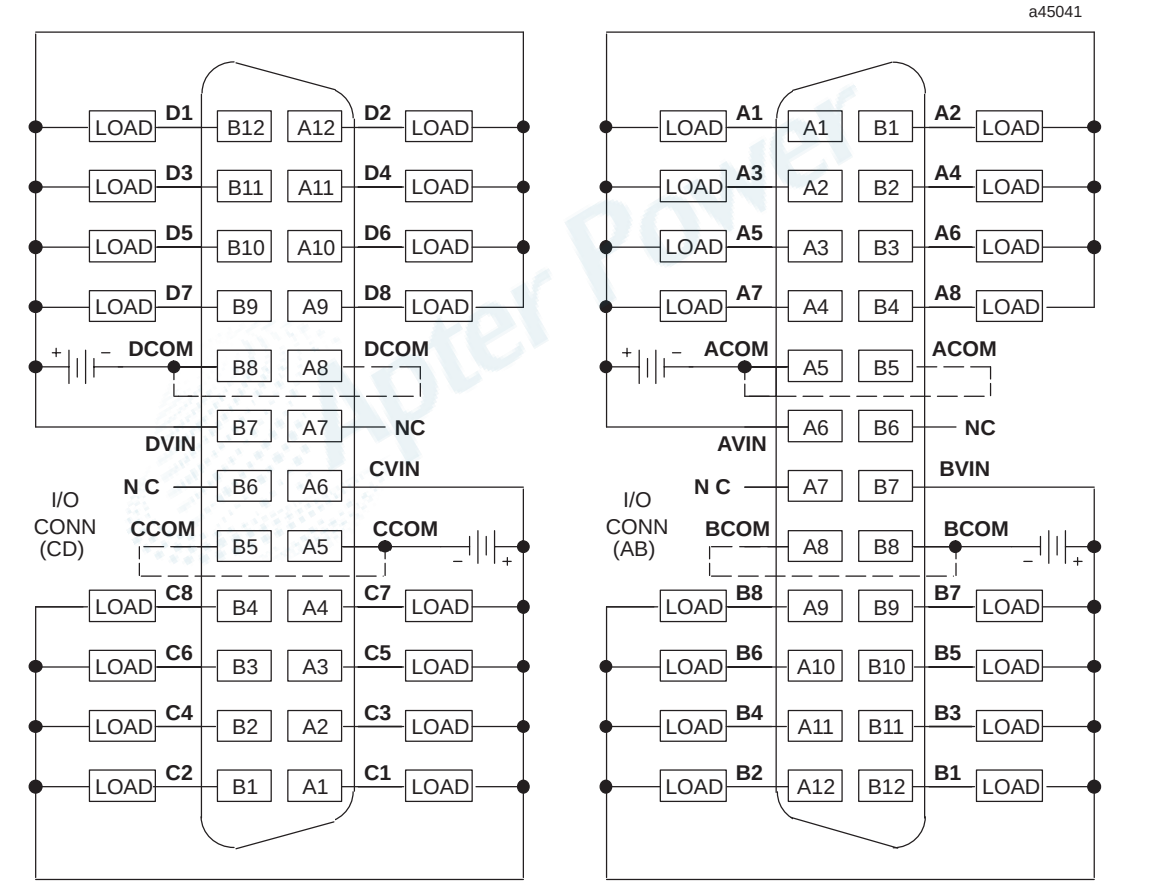

Figure 7-39. Field Wiring - 5/24 Volt DC (TTL) Neg. Logic 32 Point Output Module - IC693MDL752

Field Wiring Work Sheet for IC693MDL752

The following table is provided for the convenience of our customers as an aid to wiring the 24-pin connectors using cable IC693CBL315. It includes all of the required wiring information in one table. This table has the following information:

- *module point number*: A1 - A8, B1 - B8, C1 - C8, D1 - D8, voltage and common points
- *connector pin number*: A1 through A12, and B1 through B12
- *cable pair number*: pair 1 through pair 12
- *wire color code*: base color or base color with tracer color

Columns are also provided for circuit references and customer wire numbers. Please copy and use the work sheets on this and the following page as needed when wiring the 5/24 Volt DC (TTL) Negative Logic, 32 Point Output module.

Wiring for Module Groups A and B (connector on right front of module)

Reference	Module Point Number	Connector Pin Number	Cable Pair Number	Wire Color Code	Wire Number
	A1	A1	1	Brown	
	A2	B1	7	Violet	
	A3	A2	1	Brown/Black	
	A4	B2	7	Violet/Black	
	A5	A3	2	Red	
	A6	B3	8	White	
	A7	A4	2	Red/Black	
	A8	B4	8	White/Black	
	A Common	A5	3	Orange	
	A Common	B5	9	Gray	
	AVIN	A6	3	Orange/Black	
	N/C	B6	9	Gray/Black	
	N/C	A7	4	Yellow	
	BVIN	B7	10	Pink	
	B Common	A8	4	Yellow/Black	
	B Common	B8	10	Pink/Black	
	B8	A9	5	Dark Green	
	B7	B9	11	Light Blue	
	B6	A10	5	Dark Green/Black	
	B5	B10	11	Light Blue/Black	
	B4	A11	6	Dark Blue	
	B3	B11	12	Light Green	
	B2	A12	6	Dark Blue/Black	
	B1	B12	12	Light Green/Black	