21000, 24701, and 164818 Proximity Probe Housing Assemblies

Datasheet

Cordant™

141600 Rev. AC

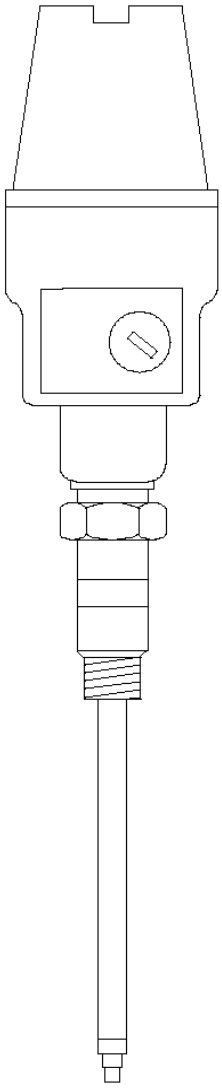

Description

To externally mount proximity probes, use one of these all-metal Proximity Probe Housing Assemblies:

- 21000 aluminum probe housing assembly
- 24701 stainless steel probe housing assembly

The 21000, 24701, and 164818 Proximity Probe Housing Assemblies consist of the following parts:

- A dome cover that screws into the body of the housing
- Threaded ports for conduit connections
- A probe sleeve of optional length
- O-rings
- A reverse mount proximity probe
- A thread seal
- Optional conduit fittings
- An optional standoff adapter

A newer 31000/32000 proximity probe housing assembly is available with more flexible mounting options, better environmental resistance, and other improved features. We recommend this proximity probe housing assembly for installations where an explosion proof housing is not required. See 31000 and 32000 Proximity Probe Housings product datasheet (document 141610).

The 21000, 24701, and 164818 Proximity Probe Housing Assemblies are available with Canadian Standards Association (CSA) approvals. They are rated explosion proof for hazardous areas.

C US

Baker Hughes

You can order hazardous area approved proximity probes with 21000 aluminum and 24701 stainless steel housings for intrinsically safe applications. Both housings are certified as CSA Type 4 enclosures and are fully compliant with the American Petroleum Institute's (API) 670 Standard for externally mounted proximity probe housings.

The 164818 Compact Proximity Probe Housing is also available for applications with space restrictions. Ceramic capped probes are available with the 164818 housing.

Sleeve length is determined by the location in which the probe and housing are installed. The probe lead must be longer than the sleeve. Sleeve lengths longer than 304 mm (12 inches) require additional sleeve support to reduce the vibration associated with unsupported long sleeve lengths.

Bently Nevada offers a probe support and oil seal (part number 37948-01) for long sleeves that must go through an inner bearing housing. We also make custom sleeve supports.

Related Documents

For probe information, refer to the following manuals:

- *3300 XL 8mm & 3300 5mm Proximity Transducer System User Guide* (document 141078)
- *3300 XL NSv Proximity Transducer System User Guide* (document 147357)
- *3300 XL 11mm Proximity Transducer System Installation* User Guide (document 146255)
- *Radiation Resistant Probe and Proximitor System* (document TW8029407)

Specifications

Environmental

Temperature Range

3300 XL 8mm Probe	
Operating and storage	-51°C to +177°C (-60°F to +351°F)
3300 XL 11mm Probe	
Operating and storage	-51°C to +177°C (-60°F to +351°F)
3300 NSv Probe	
Operating	-34°C to +177°C (-30°F to +351°F)
Storage	-51°C to +177°C (-60°F to +351°F)

CAUTION

EQUIPMENT DAMAGE

Exposing 3300 XL or 3300 NSv probes to temperatures below -34°C (-30°F) may cause premature failure of their pressure seals.

Mechanical

Material	
21000	Aluminum body with 304 stainless steel sleeve
24701	303 stainless steel body, with 304 stainless steel sleeve
Mass (Weight)	
21000	1.1 kg (2.4 lb) typical, without fittings
24701	1.8 kg (4.1 lb) typical, without fittings

Monitor Module	1 full-height front slot
I/O Modules	1 full-height rear slot

Although explosion-proof fittings are available for all housings, only CA versions of the housing are rated as explosion-proof by CSA when ordered with the E:00, E:01, E:02, or E:04 options.

When ordering a proximitor and an extension cable with the housing, choose a probe with matching approval options.

You can only order probes for CA21000 or CA24701 with multiple approvals. To order CA versions with no probe, select the A:00 option.

CA24701-AA-BB-CC-DDD-EE-FF

A: Probe with Connector	
00	Probe not required
01	190 series, CSA, BNPS connector
02	190 series, CSA, API connector
27	3300 XL NSv , multiple approval
28	3300 XL 8mm, multiple approval
30	3300 XL 11mm, multiple approval
32	3300 XL NSv with connector protector, multiple approval
34	3300 XL 8mm with connector protector, multiple approval
36	3300 XL 11mm with connector protector, multiple approval
B: Probe Cable Length	
00	Probe cable not required
05	20 in (0.5 m)
10	39 in (1.0 m)
12	12.0 ft (3.6 m)
18	18.0 ft (3.6 m)
24	24.0 ft (7.3 m)
30	24.0 ft (7.3 m)
36	36.0 ft (10.9 m)
C: Standoff Adapter (Option C Dimension)	
15	Minimum length 1.5 in (38 mm)
75	Maximum length 7.5 in (191 mm)
	Examples 1.5 in (38 mm) = **15** No standoff adapter = **00**
	Recommendation Order in increments of 0.5 in (13 mm)
D: Probe Penetration (Option D Dimension)	
010	Minimum length 1.0 in (25.4 mm)
Other	See Figure 2: 24701/CA24701 Proximity Probe Housing Assembly on page 17.
	Example 3.7 in (94 mm) = **037** 22.4 in (569 mm) = **224**
	Recommendation Order in increments of 0.1 in (3 mm)

Probe P/N and S/N may be displayed on a flag label for some combinations of the C plus D options where only a small section of the probe cable is visible.

For probe penetration lengths between 1.0 and 2.0 inches, it may be necessary to counter bore the machine case to reduce probe side view or rear view effects.

If you select a probe penetration length (C plus D) greater than 300 mm (12 in), you must add sleeve support near the probe to prevent resonance from occurring. Adjustment range of probe penetration option D is 13 mm (± 0.5 in). For the maximum value of C plus D, see Figure 2: 24701/CA24701 Proximity Probe Housing Assembly on page 17.

E: Fittings	
00	Without fittings
01	One 3/4-14 NPT explosion-proof fitting One 3/4-14 NPT plug
02	Two 3/4-14 NPT explosion-proof fittings
03	One 3/4-14 NPT plug One 3/4-14 to 1/2-14 NPT reducer One cable seal grip with grommets for the following cable sizes: • 1/8 to 3/16 inches • 1/4 to 5/16 inches • 5/16 to 3/8 inches
04	One 3/4-14 NPT plug only

Although explosion-proof fittings are available for all housings, only CA versions of the housing are rated as explosion-proof by CSA when ordered with the E:00, E:01, E:02, or E:04 options.

When ordering a proximitor and an extension cable with the housing, choose a probe with matching approval options.

You can only order probes for CA21000 or CA24701 with multiple approvals. To order CA versions with no probe, select the A:00 option.

F: Mounting Thread	
01	As cast without threads
02	3/4-14 NPT (see note [1] below). Must be ordered if Standoff Adapter Length Option is **not** 00.
03	1-11 1/2 NPT (see note [1] below)
04	1/2-14 BSP
05	7/8-14 UNF-2A

(1) For CA21000 housing, option F must be 02. Options 02 and 03 for mounting threads have more threads than standard NPT threads. They have been machined to have approximately 5 - 7 full threads to increase mounting strength and stiffness.

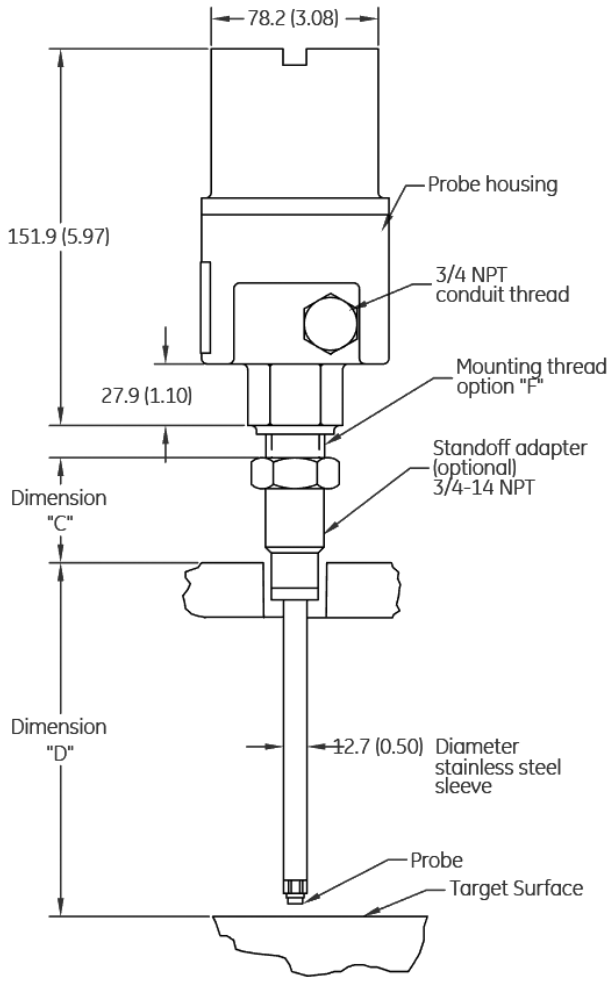

24701/CA24701 Dimensions

Probe Cable Length	Maximum (C) + (D) with visible probe (P/N and S/N)	Maximum (C) + (D) Dimension
12 in	Not visible	5.0 in (12.7 mm)
18 in	4.0 in (10.1 cm)	10.5 in (26.6 mm)
24 in	9.7 in (24.6 cm)	16.1 in (40.9 mm)
30 in	15.4 in (39.1 mm)	21.7 in (51.1 mm)
36 in	21.1 in (53.6 mm)	27.3 in (69.3 mm)
0.5 m	Not visible	13.5 in (34.3 mm)
1.0 m	17.0 in (43.18 mm)	29.2 in (74.2 mm)

Figure 2: 24701/CA24701 Proximity Probe Housing Assembly

Dimensions are in millimeters (inches).

Tables

Table 1: For Figure 1, Dimensions in mm (inches).

Catalog Number	Dimension			
	A	**B**	**C and D**	**E**
21000	83.3 (3.28)	161.6 (6.36)	See Ordering Option C & D	26.7 (1.05)
24701	78.2 (3.08)	151.9 (5.97)	See Ordering Option C & D	27.9 (1.10)

Table 2: Maximum Length of C and D Dimension for Proximity Probes

Probe Cable Length	Maximum C and D Dimension
0.5 meter (3300 Series)	343 mm (13.5 in)
1.0 meter	742 mm (29.2 in)

Table 3: Maximum C and Dimension with Standard P/N and S/N Label (non-flag label)

Probe Cable Length	Maximum C and D Dimension
0.5 meter	Not visible
1.0 meter	432 mm (17 m)