Installing STEP 5

PG with V.24 Port

For a PG with a V.24 port, the port must be converted into an “PLC-S5” port using a V.24/TTY converter (Köster box). The PG is connected to the Köster box directly via a connecting cable with an integrated V.24/TTY converter (6) or via the connecting cable (5). Depending on the type of PLC, the Köster box is connected using connecting cable (7) or (8). These connecting cables must be ordered separately.

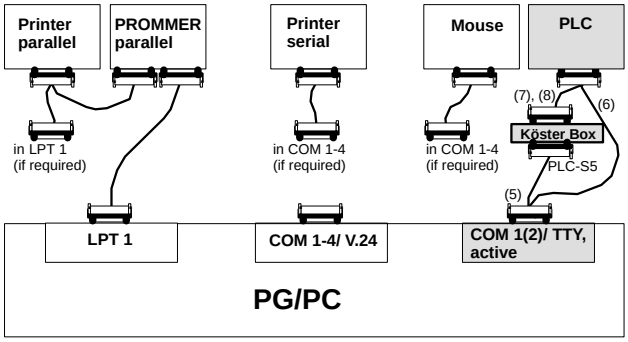

Connecting a PG with a V.24 Port to a PLC

The PG is switched off.

PG - PLC connection with connecting cable (6) direct or via (5), (7) or (8):

1. Establish the connection between the COM 1 port of the PG and the Köster box using the connecting cable (5).
2. Plug the connecting cable (7) or (8) into the 25-pin socket on the Köster box and establish the connection to the PLC.
3. Secure the connectors in place.

Connecting Cables for a PG with a V.24 Port

Connecting cable (5), order no. Köster 224 22x[2)]

Connecting cable (6), order no. 6ES5 734-1BD20 (length 3.2m)

Connecting cable (7), order no. 6ES5 731-0xxx0[1)]

Connecting cable (8), order no. 6ES5 731-1xxx0[1)]

1) xxx is the length key. The cables are available in lengths ranging from 1m to 1000 m. Please refer to catalog ST 59 for details on the length key.

2) x stands for the connector type of the PG - Köster box connecting cable

info@apterpower.com
+86 18106909650
WHATSAPP QUOTE >
SOURCE PAGE 1 / 2

2.2.3 Connecting an EPROM Programmer to the PG

The PGs have an integrated EPROM programming interface. If you are using a PC as a programming device, you can connect an external EPROM programmer. Various devices are available for connection to the parallel or serial port.

The device connected to the parallel port is known as the **external prommer**.

Parallel Prommer

Port: LPT 1

The cable for the parallel connection is supplied with the external prommer. The external prommer has a connection which extends the parallel port for a parallel printer.

Connection PG-Prommer

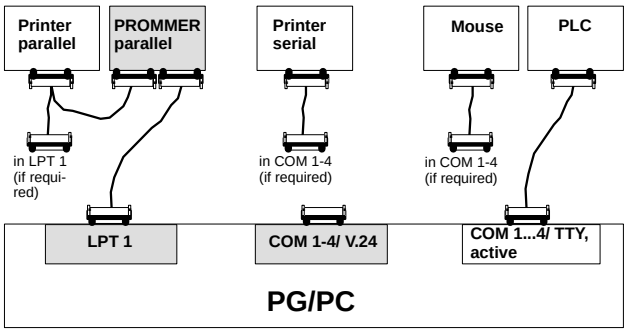

Connecting your PG to the Prommer

The PG and the prommer are both switched off.

1. Parallel prommer: using the supplied LPT cable, connect the LPT 1 port on the PG with the PC port on the external prommer and, if applicable, connect your parallel printer to the Printer port of the external prommer.
2. Any connectors fitted with screws or clips must be secured.

2.2.4 Overview – Connecting Cables to PLC, Partner PG, Prommer

Connecting cable no.	Order number	Connection from (Connector on PG)	to
3	6ES5 731-6AG00	PC COM 1 (PG 7xx: 25-pin male)	Connecting cable 7 or 8 (PLC) Connecting cable 10 (partner PG)
4	6ES5 734-2xxx0 [1)]	PC COM 1, 2 25-pin female	PLC 15-pin female
5	Köster 224 22x	PC COM 1, 2	Köster box
6	6ES5 734-1BD20	PC COM 1, 2 25-pin female	PLC 15-pin female
7	6ES5 731-0xxx0 [1)]	Connecting cable 3 or Köster box	PLC 25-pin male
8	6ES5 731-1xxx0 [1)]	Connecting cable 3 or Köster box	PLC 15-pin female
10	6ES5 733-2xxx0 [1)]	Connecting cable 3 or Köster box	Partner-PG COM 1

[1)] xxx is the length key. The cables are available in lengths ranging from 1m to 1000 m. Please refer to catalog ST 59 for details on the length key. A maximum cable length of 3 m is permitted for use with a prommer.

info@apterpower.com
+86 18106909650
WHATSAPP QUOTE >
SOURCE PAGE 2 / 2

GLOBAL INDUSTRIAL AUTOMATION SOURCING

Ready to source this part?

Ask for availability, pricing and delivery options.

Request a fast quote

Include the product title and any required part number or quantity.

EMAIL

info@apterpower.com

PHONE

+86 18106909650

SCAN TO CHAT ON WHATSAPP

CHAT ON WHATSAPP >

PRODUCT: 6ES5734-1BD20 / SIMATIC S5 V.24/TTY CONNECTING CABLE, 3.2 M

The enclosed manufacturer pages are reproduced without alteration to technical content.

Apter Power is not an authorized distributor, reseller or representative of the products featured.

Product names, trademarks, brands and logos remain the property of their respective owners.