Apter Power

Installation Instructions

Original Instructions

Allen-Bradley
by ROCKWELL AUTOMATION

FLEX I/O Digital Sourcing Input and Sinking Output Modules

Catalog Numbers 1794-IV16, 1794-OV16, 1794-OV16P

Topic	Page
Summary of Changes	1
Overview	5
Install Your Module	5
Configure Your Input Module	7
Configure Your Output Module	8
Specifications	8
Additional Resources	11

Summary of Changes

This publication contains the following new or updated information. This list includes substantive updates only and is not intended to reflect all changes.

Topic	Page
Updated Certifications	10
Added Additional Resources	11

Apter Power

Overview

The FLEX™ I/O module mounts on 1794 terminal base.

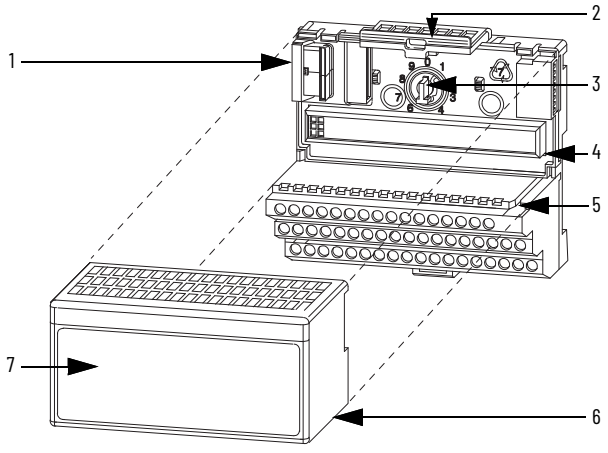

	Description		Description
1	Flexbus connectors	5	Groove
2	Latching mechanism	6	Alignment bar
3	Keyswitch	7	Module
4	Terminal base		

Install Your Module

ATTENTION: During mounting of all devices, be sure that all debris (for example, metal chips, wire strands, and so on) is kept from falling into the module. Debris that falls into the module could cause damage on power-up.

1. Rotate the keyswitch (3) on the terminal base (4) clockwise to position 9 as required for this type of module.
2. Make sure the Flexbus connector (1) is pushed all the way to the left to connect with the neighboring terminal base or adapter. **You cannot install the module unless the connector is fully extended.**
3. Make sure the pins on the bottom of the module are straight so they align properly with the connector in the terminal base.
4. Position the module (7) with its alignment bar (6) aligned with the groove (5) on the terminal base.
5. Press firmly and evenly to seat the module in the terminal base unit. The module is seated when the latching mechanism (2) is locked into the module.

Connect Wiring for 1794-IV16, 1794-OV16, and 1794-OV16P

1. Connect individual input or output wiring to numbered terminals on the 0...15 row (A) as indicated in Table 1.
2. **For 1794-IV16** – Connect the associated input device common to the corresponding terminal on the 16...33 row. (B) for each input as indicated in Table 1. Commons are internally connected together. If using 3-wire input devices, also connect the associated input power lead to the corresponding terminal on the 34...51 row (C).

   For 1794-OV16, 1794-OV16P – Connect the associated +V DC power lead of the output device to the corresponding terminal on the 34...51 row (C) for each output as indicated in Table 1. The +V power terminals of row (C) are internally connected together.
3. Connect +24V DC power to terminal 34 on the 34...51 row (C).
4. Connect DC common to terminal 16 on the 16...33 row (B).
5. If daisy chaining power to the next terminal base, connect a jumper from terminal 51 (+V DC) on this base unit to terminal 34 on the next base unit.
6. If continuing DC common to the next base unit, connect a jumper from terminal 33 (common) on this base unit to terminal 16 on the next base unit.

ATTENTION: Total current through the terminal base unit is limited to 10 A. Separate power connections to the terminal base unit may be necessary.

Figure 1 - Connect Wiring for 1794-TB3 and 1794-TB3S

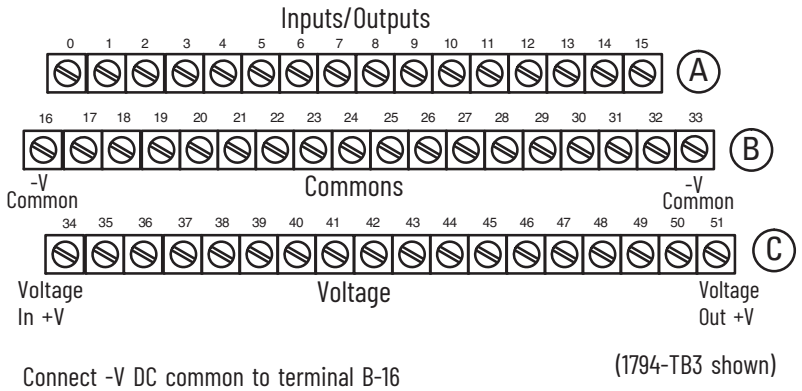

(1794-TB3 shown)

Connect -V DC common to terminal B-16
Connect +V DC power to terminal C-34
(Use B-33 and C-51 for daisy chaining to next terminal base unit)
Note: Terminals 35...50 are not used for the 1794-TB2 terminal base

Table 1 - Wiring Connections for the 1794-IV16, 1794-OV16, and 1794-OV16P Modules

Channel	Signal	Power Terminal	Common Terminal[1]
		1794-OV16, 1794-OV16P, 1794-IV16[1]	1794-IV16
0	A-0	C-35	B-17
1	A-1	C-36	B-18
2	A-2	C-37	B-19
3	A-3	C-38	B-20
4	A-4	C-39	B-21
5	A-5	C-40	B-22
6	A-6	C-41	B-23
7	A-7	C-42	B-24
8	A-8	C-43	B-25
9	A-9	C-44	B-26
10	A-10	C-45	B-27
11	A-11	C-46	B-28
12	A-12	C-47	B-29
13	A-13	C-48	B-30
14	A-14	C-49	B-31
15	A-15	C-50	B-32
+V DC	C-34...C-51 are internally connected together.		
Common	B-16...B-33 are internally connected together.		

(1) 2-wire sourcing input devices use the input and common terminals.
3-wire sourcing input devices use the input, common, and power terminals.

Figure 2 - 2-wire and 3-wire Input Wiring for 1794-IV16

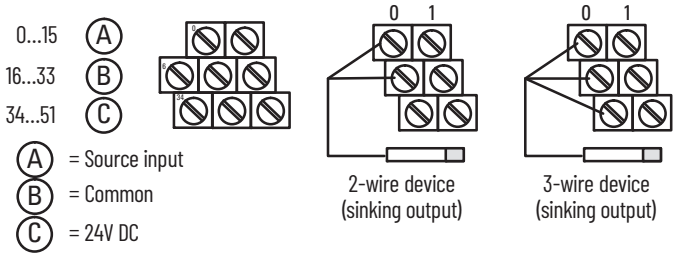

Configure Your Input Module

You configure your input module by setting bits in the configuration word (word 3).

Table 2 - Image Table Memory Map for 1794-IV16

Dec	**15**	**14**	**13**	**12**	**11**	**10**	**9**	**8**	**7**	**6**	**5**	**4**	**3**	**2**	**1**	**0**
Oct	**17**	**16**	**15**	**14**	**13**	**12**	**11**	**10**	**7**	**6**	**5**	**4**	**3**	**2**	**1**	**0**
Read 0	I15	I14	I13	I12	I11	I10	I9	I8	I7	I6	I5	I4	I3	I2	I1	I0
Read 1	C = Counter Input value of input 15															
Write 1	Not used		CF	CR	NU	Input Filter FT 0...15			Not used							
Where:	I = Input C = Counter value for input 15 FT = Input filter time CR = Counter reset CF = Counter fast - where 1 = Fast input (raw) data; 0 = Standard input filtered data NU = Not used Note: C, CR, and CF are not available when used with any series 1794-ASB or 1794-ASB2 remote I/O adapter.															

Set the Input Filter Time for the 1794-IV16 Module

To set the input filter time, set the associated bits in the output image (complementary word) for the module.

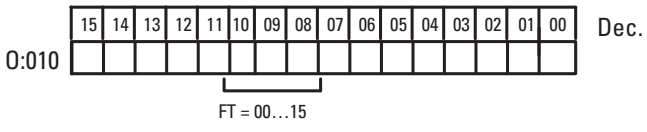

For example, to set a filter time of 8 milliseconds for a DC input module at address rack 1, module group 0, in configuration word 3, set bits 08, 09, and 10 as shown in Table 3.

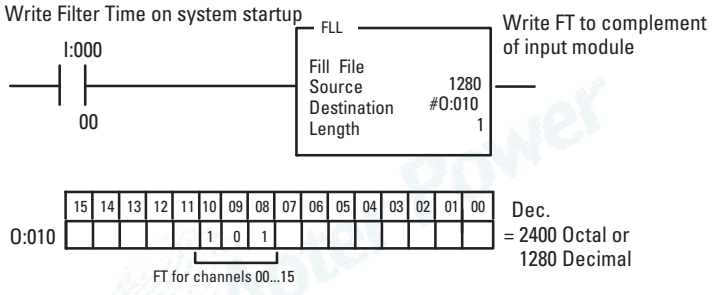

See Table 3 for additional filter times.

Table 3 - Input Filter Time

Bits			**Description**	**Selected Filter Time**
10	**09**	**08**	**Filter Time for inputs 00...15 (00...17)**	
0	0	0	Filter Time 0 (Default)	0.25 ms
0	0	1	Filter Time 1	0.5 ms
0	1	0	Filter Time 2	1 ms
0	1	1	Filter Time 3	2 ms
1	0	0	Filter Time 4	4 ms
1	0	1	Filter Time 5	8 ms
1	1	0	Filter Time 6	16 ms
1	1	1	Filter Time 7	32 ms

Configure Your Output Module

You configure your output module by setting bits in word 1.

Table 4 - Image Table Memory Map for 1794-OV16 and 1794-OV16P

Dec	15	14	13	12	11	10	9	8	7	6	5	4	3	2	1	0
Oct	17	16	15	14	13	12	11	10	7	6	5	4	3	2	1	0
Read 0	Not used															
Write 1	015	014	013	012	011	010	09	08	07	06	05	04	03	02	01	00
Where:	0 = Output															

Specifications

Input Specifications – 1794-IV16

Attribute	Value
Number of input	16, nonisolated, sourcing
On-state voltage, min	10V DC
On-state voltage, nom	24V DC
On-state voltage, max	31.2V DC
On-state current, min	2.0 mA
On-state current, nom	8.0 mA @ 24V DC
On-state current, max	11.0 mA
Off-state voltage, max	5V DC
Off-state current, min	1.5 mA
Input Impedance, max	4.7 kΩ
Isolation voltage	Tested @ 2121V DC for 1s between user and system No isolation between individual channels
Input filter time(1) Off to On On to Off	 0.25 ms, 0.5 ms, 1 ms, 2 ms, 4 ms, 8 ms, 16 ms, 32 ms 0.25 ms, 0.5 ms, 1 ms, 2 ms, 4 ms, 8 ms, 16 ms, 32 ms 0.25 ms default – Selectable using configuration word 3
Flexbus current	30 mA
Power dissipation, max	5.7 W @ 31.2V DC
Thermal dissipation, max	19.4 BTU/hr @ 31.2V DC
Indicators (field side indication, customer device driven)	16 yellow status indicators

(1) Input off-to-on filter time is the time from a valid input signal to recognition by the module. Input on-to-off filter time is the time from the input signal dropping below the valid level to recognition by the module

Output Specifications – 1794-OV16, 1794-OV16P

Attribute	Value
Number of outputs	16, nonisolated, sinking
On-state voltage, min	10V DC
On-state voltage, nom	24V DC
On-state voltage, max	31.2V DC
Output current rating	8.0 A (16 outputs @ 0.5 A)
Off-state voltage, max	31.2V DC
On-state current, min	1 mA per channel
On-state current, max	500 mA per channel
Surge current	2 A for 50 ms, repeatable every 2 s
Off-state leakage, max	0.5 mA
On-state voltage drop, max	0.2V DC
Isolation voltage	Tested @ 2121V DC for 1s between user and system No isolation between individual channels
Output signal delay(1) Off to On, max On to Off, max	 0.5 ms 1.0 ms
Flexbus current	80 mA
Power dissipation, max	4.2 W @ 31.2V DC

Output Specifications – 1794-OV16, 1794-OV16P (Continued)

Attribute	Value
Thermal dissipation, max	14.3 BTU/hr @ 31.2V DC
Indicators (field side indication, logic driven)	16 yellow status indicators
Fusing	Module outputs are not fused. Fusing is recommended. If fusing is desired, you must provide external fusing. Use SAN-O MQ4-800 800 mA fuses - **1794-OV16** Outputs are electronically protected - **1794-OV16P**

(1) The time from the receipt of an On or Off command to the output actually turning On or Off.

General Specifications

Attribute	Value
Recommended terminal base unit	1794-TB3, 1794-TB3K, 1794-TB3S, 1794-TB3SK
Terminal base screw torque	Determined by the installed terminal base
Keyswitch position	2
External DC power supply voltage, nom	24V DC
External DC power voltage range	10...31.2V DC (includes 5% AC ripple) See derating curve for 1794-IV16 (Figure 3)
External DC power supply current	49 mA @ 24V DC (21...65 mA) – **1794-OV16, 1794-OV16P**
Wiring category[1]	2
Wire size	Determined by the installed terminal base
Dimensions, approx. (H x W x D) (with module installed)	94 x 94 x 69 mm (3.7 x 3.7 x 2.7 in.)
Weight, approx.	90 g (3.17 oz.) – **1794-IV16** 77 g (2.72 oz.) – **1794-OV16** 81 g (2.86 oz.) – **1794-OV16P**
Enclosure type rating	None (open-style)
North American temp code	T3C – **1794-IV16** T4A – **1794-OV16, 1794-OV16P**
UKEX/ATEX temp code	T3 – **1794-IV16** T4 – **1794-OV16, 1794-OV16P**
IECEx temp code	T3 – **1794-IV16** T4 – **1794-OV16, 1794-OV16P**

(1) Use this Conductor Category information for planning conductor routing. See the Industrial Automation Wiring and Grounding Guidelines, publication 1770-4.1.

Environmental Specifications

Attribute	Value
Temperature, operating	IEC 60068-2-1 (Test Ad, Operating Cold), IEC 60068-2-2 (Test Bd, Operating Dry Heat), IEC 60068-2-14 (Test Nb, Operating Thermal Shock): -20...+55 °C (-4...+131 °F)
Temperature, nonoperating	IEC 60068-2-1 (Test Ab, Unpackaged nonoperating Cold), IEC 60068-2-2 (Test Bb, Unpackaged nonoperating Dry Heat), IEC 60068-2-14 (Test Na, Unpackaged nonoperating Thermal Shock): -40...+85 °C (-40...+185 °F)
Relative humidity	IEC 60068-2-30 (Test Db, Unpackaged Damp Heat): 5...95% noncondensing
Vibration	IEC 60068-2-6 (Test Fc, Operating): 5 g @ 10...500 Hz
Shock, operating	IEC 60068-2-27 (Test Ea, Unpackaged Shock): 30 g
Shock, nonoperating	IEC 60068-2-27 (Test Ea, Unpackaged Shock): 50 g
Emissions	IEC 61000-6-4
ESD immunity	IEC 61000-4-2: 4 kV contact discharges 8 kV air discharges
Radiated RF immunity	IEC 61000-4-3: 10V/m with 1 kHz sine-wave 80% AM from 80...6000 MHz
EFT/B immunity	IEC 61000-4-4: ±2 kV at 5 kHz on signal ports
Surge transient immunity	IEC 61000-4-5: ±1kV line-earth(CM) on shielded ports ±1kV line-line(DM) and ±2kV line-earth(CM) on signal ports
Conducted RF immunity	IEC 61000-4-6: 10V rms with 1 kHz sine-wave 80% AM from 150 kHz...80 MHz on shielded signal ports