Apter Power

SERVO DUTY

Size 21 HaroMax

Harowe™ brand

Heavy Duty Brushless Resolvers

Key Features

- Frameless size 21 Servo Mounting
- Anodized Aluminum Housing with Low Mass
- Machine Wound Stator for High Accuracy

Determine resolver required characteristics from this guide. Use color-keyed diagram below, in conjunction with tables on following pages, to select part number. Please review PDF for part number selected before ordering.

RoHS
Most Models



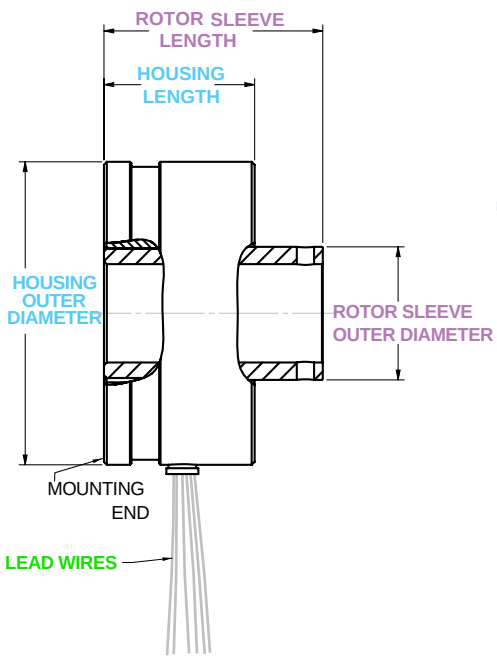

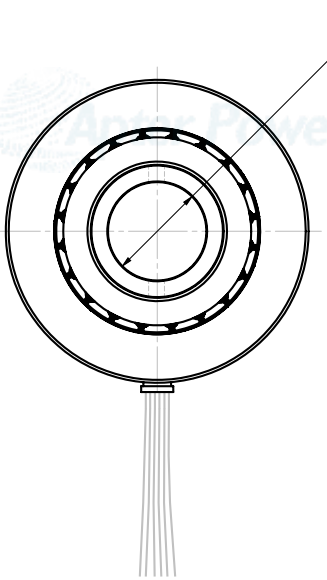

PHASING

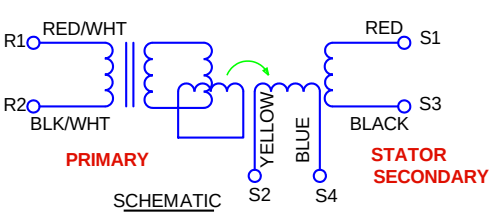

ELECTRICAL & MECHANICAL DATA AT 25°C VALUES ARE REFERENCE UNLESS OTHERWISE TOLERANCED HIPOT TESTING PERFORMED AT 60HZ, 4 SECOND DURATION		
ELEC CYC / MECH CYC	deg/deg	–
EXCITATION FREQUENCY	±1% kHz	–
INPUT VOLTAGE	±5% V rms	–
INPUT CURRENT	Max. mA rms	–
INPUT POWER	Watts	–
IMPEDANCE ZRO	Ohms	–
IMPEDANCE ZRS	Ohms	–
IMPEDANCE ZSO	Ohms	–
IMPEDANCE ZSS	Ohms	–
TRANSFORMATION RATIO	Min. to Max.	–
DC RESISTANCE (R1-R2)	Ohms	–
DC RESISTANCE (S1-S3, S2-S4))	Ohms	–
ERROR	±Max. arcminutes	–
PK-PK POSITION ERROR	Max. arcminutes	–
PK-PK VELOCITY ERROR	Max. %	–
PHASE SHIFT, OPEN CIRCUIT	degrees	–
NULL VOLTAGE	Max. mV rms	–
HIPOT, LEADS TO CASE, 500VAC	Max. mA rms	–
HIPOT, INTERPHASE, 250AC	Max. mA rms	
TEMPERATURE RANGE	°C	–
WEIGHT	oz	–
CONTINUOUS SPEED	Max. kRPM	–

Worldwide Brands: NorthStar™ • Acuro™ • Dynapar™ • Hengstler™ • Harowe™

DYNAPAR™
INNOVATION - CUSTOMIZATION - DELIVERY

WWW.DYNAPAR.COM

Headquarters: 1675 Delany Road • Gurnee, IL 60031-1282 • USA

Customer Service:
Tel.: +1.800.873.8731
Fax: +1.847.662.4150
custserv@dynapar.com

European Sales Representitive
Hengstler GmbH
Uhlandstrasse 49, 78554 Aldingen
Germany
www.hengstler.com

Harowe™ brand is a trademark of DYNAPAR. All rights reserved.
Specifications subject to change without notice.

SERVO DUTY

Size 21 HaroMax

Harowe™ brand

21 - BRX - 700 - B 42 AA

	FRAME SIZE
21	Basic OD is 2.1 inches

	SYSTEM TYPE
BRX	Single speed - Rotor Primary

TYPE	HOUSING MOUNT-MATERIAL-LENGTH-PILOT
700	Single Servo Groove - Aluminum - 1.02 inch - 2.061 inch
701	Single Servo Groove - Aluminum - 1.26 inch - 1.85 inch
702	Single Servo Groove - Aluminum - 26.06 mm - 50.77 mm
704	None- Aluminum - 25.8 mm - 52.44 mm
708	Flange - Aluminum - 1.02 inch - 1.968 inch
709	Flange - Steel - 26 mm - 55 mm

		Input Excitation				Phase	Zro	Zso	Rotor	Stator	Null	
Code	Type	Vrms	KHz	mA	TR	Shift	Ohm	Ohm	Ohm	Ohm	mv	Speed
B	BRX	2	10	46	1.00	-3	56	602	18	120	30	1
C	BRX	6	7.5	25	0.33	-13	306	456	23	118	20	1
D	Note #1	8	8	46	0.50	1	260	565	84	120	30	1
D	Note #2	11.3	8	125	0.52	-7.5	107	235	17	44	20	1
E	BRX	6	6	28	0.31	-8	252	193	30	44	20	1
F	BRX	4	5	27	0.50	-4	178	400	27	116	25	1
H	BRX	4	4	55	0.45	10	94	143	27	45	25	1
J	BRX	7	10	40	0.50	-5	214	638	75	120	30	1

NOTES

1. X700 except 21BRX700-D11AC
2. 21BRX700-D11AC

CODE	BORE	LENGTH
3	0.8	26 mm
6	0.63	1.02
11	0.67	1.49 (Note 1)
11	17.04 mm	25.8 mm (Note 2)
22	22mm	35 mm

NOTES

1. For 21BRX700-D11AC
2. For 21BRX704-F11BB

CODE	BORE	LENGTH
23	12mm	26.06 mm
42	0.5	1.06
84	0.59	1.26
110	0.5	1.06

	ERROR				LEADS		Special	Weight
P/N	Pk-Pk arc-min	+/-	velocity %	Phasing	AWG	Inch	Features	Oz
21BRX700-B42AA	18	X	2.00	CW	28	7	X	200g
21BRX700-D110D	18	X	2.00	CCW	Cable	38	X	200g
21BRX700-D110L	18	X	2.00	CCW	Cable	69	X	200g
21BRX700-D11AC	15	X	X	CW	26	12	X	8
21BRX700-D42AA	18	X	2.00	CW	28	65	X	200g
21BRX700-D42AB	18	X	2.00	CW	28	24	X	200g
21BRX700-D42AC	18	X	2.00	CW	Cable	27	X	200g
21BRX701-C84AB	X	12	2.00	CW	26	15	X	7.4
21BRX702-J42AA	20	X	2.00	CW	28	305mm	X	200g
21BRX702-J42AB	20	X	2.00	CW	28	650mm	Shielding	200g
21BRX704-F11BB	20	X	X	CW	26	250mm	Tubing & Terminals	210g
21BRX708-H06AA	20	X	X	CCW	26	12	X	190g
21BRX709-E03AA	24	X	X	CCW	26	220mm	X	128
21BRX709-E23AA	24	X	X	CCW	26	220mm	X	128
27BRX709-L22AA	20	X	X	CCW	28	300mm	Setcrews & Tubing	347g