3300 XL 8 mm Proximity Transducer System

Datasheet

Cordant™

141194 Rev. AN



Description

The 3300 XL 8 mm Proximity Transducer System consists of:

- One 3300 XL 8 mm probe,
- One 3300 XL extension cable[1], and
- One 3300 XL Proximitor Sensor[2].

The system provides an output voltage that is directly proportional to the distance between the probe tip and the observed conductive surface and can measure both static (position) and dynamic (vibration) values. The system's primary applications are vibration and position measurements on fluid-film bearing machines, as well as Keyphasor reference and speed measurements[3].

The 3300 XL 8 mm system delivers the most advanced performance in our eddy current proximity transducer systems. The standard 3300 XL 8 mm 5-meter system also fully complies with the American Petroleum Institute's (API) 670 Standard for mechanical configuration, linear range, accuracy, and temperature stability. All 3300 XL 8 mm proximity transducer systems provide this level of performance and support complete interchangeability of probes, extension cables, and Proximitor sensors, eliminating the need to match or bench calibrate individual components.

Each 3300 XL 8 mm Transducer System component is backward compatible and interchangeable[4] with other non-XL 3300 series 5 mm and 8 mm transducer system components[5]. This compatibility includes the 3300 5 mm probe, for applications in which an 8 mm probe is too large for the available mounting space[6,7].

Baker Hughes

Proximitor Sensor

The 3300 XL Proximitor Sensor incorporates numerous improvements over previous designs. Its physical packaging allows you to use it in high-density DIN-rail installations. You can also mount the sensor in a traditional panel mount configuration, where it shares an identical 4-hole mounting “footprint” with older Proximitor Sensor designs. The mounting base for either option provides electrical isolation and eliminates the need for separate isolator plates. The 3300 XL Proximitor Sensor is highly immune to radio frequency interference, allowing you to install it in fiberglass housings without adverse effects from nearby radio frequency signals. The 3300 XL Proximitor Sensor’s improved RFI/EMI immunity satisfies European CE mark approvals without requiring special shielded conduit or metallic housings, resulting in lower installation costs and complexity.

The 3300 XL’s SpringLoc terminal strips require no special installation tools and facilitate faster, more robust field wiring connections by eliminating screw-type clamping mechanisms that can loosen.

Proximity Probe and Extension Cable

The 3300 XL probe and extension cable also reflect improvements over previous designs. A patented TipLoc molding method provides a more robust bond between the probe tip and the probe body. The probe’s cable incorporates a patented CableLoc design that provides 330 N (75 lbf) pull strength to more securely attach the probe cable and probe tip.

You can also order 3300 XL 8 mm probes and extension cables with an optional FluidLoc cable option. This option prevents oil and other liquids from leaking out of the machine through the cable’s interior.

Connectors

The 3300 XL probe, extension cable, and Proximitor sensor have corrosion-resistant, gold-plated ClickLoc connectors. These connectors require only finger-tight torque (the connectors will "click" when tight), and the specially-engineered locking mechanism prevents the connectors from loosening. These connectors require no special tools for installation or removal.

You can order the 3300 XL 8 mm probes and extension cables with connector protectors already installed. We can also supply connector protectors separately for field installations (such as when an application must run the cable through restrictive conduit). We recommend connector protectors for all installations to provide increased environmental protection[8].

Extended Temperature Range Applications

An extended temperature range (ETR) probe and ETR extension cable are available for applications in which either the probe lead or extension cable may exceed the standard 177°C (350°F) temperature specification. The ETR probe has an extended temperature rating for up to 218°C (425°F). The ETR extension cable rating is up to 260°C (500°F). Both the ETR probe and cable are compatible with standard temperature probes and cables, for example, you can utilize an ETR probe with the 330130 extension cable. The ETR system uses the standard 3300 XL Proximitor Sensor. Note that when you use any ETR component as part of your system, the ETR component limits the system accuracy to the accuracy of the ETR system.

Description Notes:

1. One-meter systems do not use an extension cable.

2. Proximitor sensors are supplied by default from the factory calibrated to AISI 4140 steel. Calibration to other target materials is available upon request.

3. Consult Bently Nevada Applications Note, Considerations when using Eddy Current Proximity Probes for Overspeed Protection Applications, when considering this transducer system for tachometer or overspeed measurements.

4. 3300 XL 8 mm components are both electrically and physically interchangeable with non-XL 3300 5 mm and 8 mm components. Although the packaging of the 3300 XL Proximitor Sensor differs from its predecessor, its design fits in the same 4-hole mounting pattern when used with the 4-hole mounting base, and will fit within the same mounting space specifications (when minimum permissible cable bend radius is observed).

5. Mixing XL and non-XL 3300-series 5 mm and 8 mm system components limits system performance to the specifications for the non-XL 3300 5 mm and 8 mm Transducer System.

6. The 3300-series 5 mm probe (refer to Document 141605) uses smaller physical packaging, but does not reduce the side view clearances or tip-to-tip spacing requirements as compared to an 8mm probe. It is used when physical (not electrical) constraints preclude the use of an 8 mm probe. When your application requires narrow side view probes, use the 3300 NSv Proximity Transducer System (refer to Document 147385).

7. 8 mm probes provide a thicker encapsulation of the probe coil in the molded PPS plastic probe tip. This results in a more rugged probe. The larger diameter of the probe body also provides a stronger, more robust case. We recommend that you use 8 mm probes when possible to provide optimal robustness against physical abuse.

8. Each 3300 XL extension cable includes silicone tape that you can use instead of connector protectors. We do not recommend silicone tape for applications that will expose the probe-to-extension cable connection to turbine oil.

Specifications

Unless otherwise noted, the following specifications are for a 3300 XL 8 mm Proximitor Sensor, extension cable and 8 mm probe between +18°C and +27°C (+64°F to +80°F) at a maximum altitude of 2000 meters, with a -24 Vdc power supply, a 10 kΩ load, an AISI 4140 steel target, and a probe gapped at 1.27 mm (50 mils). Performance characteristics apply to systems that consist solely of 3300 XL 8 mm components. The system accuracy and interchangeability specifications do not apply to transducer systems that are calibrated to any target other than our AISI 4140 steel target.

Electrical

Proximitor Sensor Input	Accepts one non-contacting 3300-series 5 mm, 3300 XL 8 mm Proximity Probe and Extension Cable.
Power	Requires -17.5 Vdc to -26 Vdc when installed with non-incendive circuit connected per installation drawing 140979 at 12 mA maximum consumption, -23 Vdc to -26 Vdc with barriers. Operation at a more positive voltage than -23.5 Vdc can result in reduced linear range.
Supply Sensitivity	Less than 2 mV change in output voltage per volt change in input voltage.
Output Resistance	50 Ω

Nominal Probe DC Resistance	
Resistance (R_{PROBE}) from Center Conductor to Outer Conductor	
Probe Length (m)	**R_{PROBE}(Ω)**
0.5	7.45 ± 0.50
1.0	7.59 ± 0.50
1.5	7.73 ± 0.50
2.0	7.88 ± 0.50
3.0	8.17 ± 0.50
5.0	8.73 ± 0.50
9.0	9.87 ± 0.50

Nominal Extension Cable DC Resistance	
Resistance (R_{CORE}) from Center Conductor to Center Conductor	
Length of Extension Cable (m)	**RCORE (Ω)**
3.0	0.66 ± 0.10
3.5	0.77 ± 0.12
4.0	0.88 ± 0.13
4.5	0.99 ± 0.15
6.0	1.32 ± 0.21
7.0	1.54 ± 0.23
7.5	1.65 ± 0.25
8.0	1.76 ± 0.26
8.5	1.87 ± 0.28

Resistance (R_{JACKET}) from Outer Conductor to Outer Conductor	
Length of Extension Cable (m)	**R_{JACKET} (Ω)**
3.0	0.20 ± 0.04
3.5	0.23 ± 0.05
4.0	0.26 ± 0.05
4.5	0.30 ± 0.06
6.0	0.39 ± 0.08
7.0	0.46 ± 0.09
7.5	0.49 ± 0.10
8.0	0.53 ± 0.11
8.5	0.56 ± 0.11

Extension Cable Capacitance	69.9 pF/m (21.3 pF/ft) typical
Field Wiring	0.2 to 1.5 mm² (16 to 24 AWG). Recommend using 3 conductor shielded triad cable and tinned field wiring. Maximum length of 305 meters (1,000 feet) between the 3300 XL Proximitor Sensor and the monitor. See the frequency response graphs, Figures 10 and 12, for signal rolloff at high frequencies when using longer field wiring lengths.
Linear Range	2 mm (80 mils). Linear range begins at approximately 0.25 mm (10 mils) from target and is from 0.25 to 2.3 mm (10 to 90 mils) (approximately –1 to –17 Vdc).
Recommended Gap Setting for Radial Vibration	-9 Vdc [approximately 1.27 mm (50 mils)]
Incremental Scale Factor (ISF)	
Standard 5 or 1 meter System	7.87 V/mm (200 mV/mil) ± 5% including interchangeability error when measured in increments of 0.25 mm (10 mils) over the 80 mil linear range from 0°C to +45°C (+32°F to +113°F).
Standard 9 meter System	7.87 V/mm (200 mV/mil) ± 6.5% including interchangeability error when measured in increments of 0.25 mm (10 mils) over the 80 mil linear range from 0°C to +45°C (+32°F to +113°F).
Extended Temperature Range (ETR) for 5 and 9 Meter Systems	7.87 V/mm (200 mV/mil) ± 6.5% including interchangeability error when measured in increments of 0.25 mm (10 mils) over the 80 mil linear range from 0°C to +45°C (+32°F to +113°F).
Deviation from best fit straight line (DSL)	
Standard 5 or 1 meter System	Less than ±0.025 mm (±1 mil) with components at 0°C to +45°C (+32°F to +113°F).
Standard 9 meter System	Less than ±0.038 mm (±1.5 mil) with components at 0°C to +45°C (+32°F to +113°F).
Extended Temperature Range 5 and 9 meter Systems	Less than ±0.038 mm (±1.5 mil) with components at 0°C to +45°C (+32°F to +113°F).

Performance over Extended Temperatures	
Standard 5 or 1 meter System	Over a probe temperature range of –35°C to +120°C (-31°F to +248°F) with the Proximitor sensor and extension cable between 0°C to +45°C (+32°F to +113°F), the ISF remains within ±10% of 7.87 V/mm (200 mV/mil) and the DSL remains within ±0.076 mm (±3 mils). Over a Proximitor sensor and extension cable temperature range of –35°C to +65°C (-31°F to +149°F) with the probe between 0°C to +45°C (+32°F to +113°F), the ISF remains within ±10% of 7.87 V/mm (200 mV/mil) and the DSL remains within ±0.076 mm (±3 mils).
Standard 9 meter System	Over a probe temperature range of –35°C to +120°C (-31°F to +248°F) with the Proximitor sensor and extension cable between 0°C to +45°C (+32°F to +113°F), the ISF remains within ±18% of 7.87 V/mm (200 mV/mil) and the DSL remains within ±0.152 mm (±6 mils). Over a Proximitor sensor and extension cable temperature range of –35°C to +65°C (-31°F to +149°F) with the probe between 0°C to +45°C (+32°F to +113°F), the ISF remains within ±18% of 7.87 V/mm (200 mV/mil) and the DSL remains within ±0.152 mm (±6 mils).
Extended Temperature Range 5 and 9 meter Systems	Over a probe and extension cable temperature range of –35°C to +260°C (-31°F to +500°F) with the Proximitor sensor between 0°C to +45°C (+32°F to +113°F), the ISF remains within ±18% of 7.87 V/mm (200 mV/mil) and the DSL remains within ±0.152 mm (±6 mils).
Frequency Response	(0 to 10 kHz), +0, -3 dB, with up to 305 meters (1000 feet) of field wiring.
Minimum Target Size	15.2 mm (0.6 in) diameter (flat target)
Shaft Diameter	
Minimum	50.8 mm (2 in)
Recommended Minimum	76.2 mm (3 in)

When gapped at the center of the linear range, the interaction between two separate transducer systems (cross-talk) will be less than 50 mV on shaft diameters of at least 50 mm (2 in) or greater. You should take care to maintain minimum separation of transducer tips, generally at least 40 mm (1.6 in) for axial position measurements or 38 mm (1.5 in) for radial vibration measurements to limit cross-talk to 50 mV or less. Radial vibration or position measurements on shaft diameters smaller than 76.2 mm (3 in) will generally change the scale factor.

Effects of 60 Hz Magnetic Fields Up to 300 Gauss				
Output Voltage in Mil pp/Gauss				
Gap	5 or 1-meter Proximitor Sensor	9 meter Proximitor Sensor	Probe	Ext. Cable
10	0.0119	0.0247	0.0004	0.0004
50	0.0131	0.0323	0.0014	0.0014
90	0.0133	0.0348	0.0045	0.0045

Mechanical

Probe Tip Material	Polyphenylene sulfide (PPS).
Probe Case Material	AISI 303 or 304 stainless steel (SST).
Probe Cable Specifications	
Standard cable	75Ω triaxial, fluoroethylene propylene (FEP) insulated probe cable in the following total probe lengths: 0.5, 1, 1.5, 2, 3, 5, or 9 meters.
Extended Temperature Range cable	75Ω triaxial, perfluoroalkoxy (PFA) insulated probe cable in the following total probe lengths: 0.5, 1, 1.5, 2, 5, or 9 meters.
Armor (optional on both)	Flexible AISI 302 or 304 SST with FEP outer jacket.
Tensile Strength (Maximum Rated)	330 N (75 lbf) probe case to probe lead. 270 N (60 lbf) at probe lead to extension cable connectors.
Connector Material	Gold-plated brass or gold-plated beryllium copper.

Probe Case Torque		
Probe Type	**Maximum Rated**	**Recommended**
Standard forward mounted probes	33.9 N•m (300 in•lbf)	11.2 N•m (100 in•lbf)
Standard forward-mount probes - first three threads	22.6 N•m (200 in•lbf)	7.5 N•m (66 in•lbf)
Reverse-mount probes	22.6 N•m (200 in•lbf)	7.5 N•m (66 in•lbf)
Extension Cable Material		
Standard cable	75 Q triaxial, fluoroethylene propylene (FEP) insulated	
Extended Temperature Range cable	75Ω triaxial, perfluoroalkoxy (PFA) insulated.	
Minimum Cable Bend Radius	25.4 mm (1.0 in)	

3300 XL 8 mm components are both electrically and physically interchangeable with non-XL 3300 5 mm and 8 mm components when minimum permissible cable bend radius is observed.

Connector Material	Gold-plated brass or gold-plated beryllium copper.
Maximum Connector Torque	0.565 N•m (5 in•lbf)

Connector-to-Connector Recommended Torque	
Connector Type	**Tightening Instructions**
Two 3300 XL gold "click" type connectors	Finger tight
One non-XL stainless steel connector and one 3300 XL connector	Finger tight plus 1/8 turn using pliers
Materials	
Proximitor Sensor Material	A308 aluminum
Connector Material	Gold-plated brass or gold-plated beryllium copper.
Length	
System Length	5 or 9 meters (including extension cable) or 1 meter (probe only).
Weight	
Total System Weight (Typical)	0.7 kg (1.5 lb m)
Probe	323 g/m (11.4 oz)
Extension Cable	34 g/m (0.4 oz/ft)
Armored Extension Cable	103 g/m (1.5 oz/ft)
Proximitor Sensor	246 g (8.67 oz)

Thread Engagement Limits

Probe Case Thread	Maximum Length of Thread Engagement
3/8-24	0.563 in
M10x1	15 mm

Maximum thread engagement lengths are per the industry standard of 1.5 times the nominal thread diameter. A fit class matching that of the external probe thread is assumed for all internal threads. Applications with thread engagement lengths exceeding the values in the table above may exhibit binding during installation. Contact your Bently Nevada representative if you require probe thread engagement lengths exceeding the values above. Bently Nevada does not replace proximity probes under warranty due to excessive thread engagement lengths.

Environmental Limits

Probe Temperature Range	
Operating and Storage Temperature	
Standard Probe	-52°C to +177°C (-62°F to +350°F)
Extended Temperature Range Probe	-52°C to +218°C (-62°F to +425°F) for the probe tip; -51°C to +260°C (-60°F to +500°F) for the probe cable and connector.

Exposing the probe to temperatures below –34˚C (-30˚F) may cause premature failure of the pressure seal.

Probe Pressure
3300 XL 8 mm probes are designed to seal differential pressure between the probe tip and case. The probe sealing material consists of a Viton® O ring. Probes are not pressure tested prior to shipment. Contact our custom design department if you require a test of the pressure seal for your application.

It is the responsibility of the customer or user to ensure that all liquids and gases are contained and safely controlled should leakage occur from a proximity probe. In addition, solutions with high or low pH values may erode the tip assembly of the probe causing media leakage into surrounding areas. Bently Nevada does not be held responsible for any damages resulting from leaking 3300 XL 8 mm proximity probes. In addition, 3300 XL 8 mm proximity probes does not be replaced under the service plan due to probe leakage.

Extension Cable Temperature Range	
Operating and Storage Temperature	
Standard Cable	-52°C to +177°C (-62°F to +350°F)
Extended Temperature Range Cable	-52°C to +260°C (-62°F to +500°F)

Proximitor Sensor Temperature Range	
Operating Temperature	-52°C to +100°C (-62°F to +212°F)
Storage Temperature	-52°C to +105°C (-62°F to +221°F)

Probe Relative Humidity
Less than a 3% change in Average Scale Factor (ASF) when tested in 93% humidity in accordance with IEC standard 68 2 3 for up to 56 days.

Compliance and Certifications

FCC

This device complies with part 15 of the FCC Rules. Operation is subject to the following two conditions:

- This device may not cause harmful interference.
- This device must accept any interference received, including interference that may cause undesired operation.

EMC

European Community Directive:

EMC Directive 2014/30/EU

Standards

EN 61000-6-2; Immunity for Industrial Environments

EN 61000-6-4; Emissions for Industrial Environments

RoHS

European Community Directive:

RoHS Directive 2011/65/EU

China RoHS

Cables associated with the product(s) mentioned in this datasheet have an EFUP designation of 15 years, in accordance with SJ/T 11364-2024.



Maritime

2019 Rules for Conditions of Classification,

Part 1, 1-1-1/7.7, 1-1-A3, 1-1-A4

2019 Rules for Conditions of Classification,

Part 1, Offshore Units and Structures

1-1-4/9.7, 1-1-A2, 1-1-A3

Functional Safety

SIL 2, HFT = 0

SIL 3, HFT = 1

Hazardous Area Approvals

For the detailed listing of country and product-specific approvals, refer to the *Approvals Quick Reference Guide (108M1756)*.

For additional technical documentation, please log in to bntechsupport.com and access the Bently Nevada Media Library.

cNRTLus

3300 XL Proximitor Sensor

ia When installed with intrinsically safe zener barriers per drawing 141092 or when installed with galvanic isolators.	Class I, Zone 0: AEx/Ex ia IIC T4/T5 Ga; Class I, Groups A, B, C, and D, Class II, Groups E, F and G, Class III; T5 @ Ta= -55°C to + 40°C. T4 @ Ta= -55°C to + 80°C.
nA, ec When installed with non-incendive circuit connected per drawing 140979.	Class I, Zone 2: AEx/Ex nA IIC T4/T5 Gc; Class I, Division 2, Groups A, B, C, and D; Class I, Zone 2: AEx/Ex ec IIC T4/T5 Gc; Class I, Division 2, Groups A, B, C, and D; T5 @ Ta= -55°C to + 40°C T4 @ Ta= -55°C to + 80°C

3300 XL Probe

ia When installed with intrinsically safe zener barriers per drawing 141092 or when installed with galvanic isolators.	Class I, Zone 0: AEx/Ex ia IIC T5...T1 Ga; Class 1, Groups A, B. C, and D, Class II, Groups E, F, and G, Class III; (see Temperature Schedule table to follow)
nA, ec When installed with non-incendive circuit connected per drawing 140979.	Class I, Zone 2: AEx/Ex nA IIC T5...T1 Gc; Class 1, Division 2, Groups A, B, C, D; Class 1, Zone 2: AEx/Ex ec IIC T5...T1 Gc; Class I, Division 2, Groups A, B, C, and D; (see Temperature Schedule table to follow)

ATEX/IECEx

3300 XL Proximitor Sensor

ia	II 1 G Ex ia IIC T4/T5 Ga Ex ia IIIC T90C/T105C Dc For EPL Dc: T105C @ Ta = -55°C to 100°C T90C @ Ta = -55°C to +85°C Ui= -28V / Uo= -28V Ii= 140mA / Io= 140mA Pi= 0.91W / Po= 0.742W Ci- 47nF / Co= 1.5nF Li= 1460µH / Lo= 610µH
nA,ec	II 3 G Ex nA IIC T4/T5 Gc Ex ec IIC T4/T5 Gc Ui= -28V / Ii= 140 mA T5 @ Ta= -55˚C to + 40˚C T4 @ Ta= -55 ˚C to + 80˚C

3300 XL Probe

Probe entity parameters are met when used with BN extension cables and connected to BN Prox.

<table>
<tr><td>ia</td><td>II 1 G
Ex ia IIC T5...T1 Ga,
(see Temperature Schedule table to follow)
Ex ia IIIC T90°C ... T280°C Dc
For EPL Dc:<table><tr><td>Ui= -28V</td><td>Ci = 1.5 nF</td></tr><tr><td>Ii = 140 mA</td><td>Li =610 µH</td></tr><tr><td>Pi = 0.91 W</td><td></td></tr></table></td></tr>
<tr><td>nA,ec</td><td>II 3 G
Ex nA IIC T5...T1 Gc,
Ex ec IIC T5...T1 Gc,
(see Temperature Schedule table to follow)<table><tr><td>Ui= -28V</td><td>Ii= 140 mA</td></tr></table></td></tr>
</table>

Temperature Schedule

Temperature Classification	Ambient Temperature (Probe Only)
For EPL Ga and Gc	
T1	-55°C to +232°C
T2	-55°C to +177°C
T3	-55°C to +120°C
T4	-55°C to +80°C
T5	-55°C to +40°C
For EPL Dc	
T280°C @ Ta	-55°C to +232°C
T225°C @ Ta	-55°C to +177°C
T170°C @ Ta	-55C to +120°C
T130°C @ Ta	-55°C to +80°C
T105°C @ Ta	-55°C to +100°C
T90°C @ Ta	-55°C to +40°C

Hazardous Area Conditions of Safe Use

cNRTLus:

ia

Install per Bently Nevada drawing 141092.

nA, ec

Install per Bently Nevada drawing 140979.

ATEX/IECEx:

ia

Install per Bently Nevada drawing 141092.

nA, ec

The Proximitor must be installed so as to provide the terminals with a degree of protection of at least IP54.

Ordering Information

For the detailed listing of country and product-specific approvals, refer to the *Approvals Quick Reference Guide (108M1756)*.

For additional technical documentation, please log in to bntechsupport.com and access the Bently Nevada Media Library.

Ordering Information for Probes

3300 XL 8 mm Proximity Probes:

330101 3300 XL 8 mm Probe, 3/8-24 UNF thread, without armor(2)

330102 3300 XL 8 mm Probe, 3/8-24 UNF thread, with armor(2)

Part Number-AA-BB-CC-DD-EE

A: Unthreaded Length Option	
Unthreaded length must be at least 0.8 in. less than the case length.	
Order in increments of 0.1 in. **Length configurations:** Maximum unthreaded length: 8.8 in. Minimum unthreaded length: 0.0 in. Example: **0 4** = 0.4 in.	
B: Overall Case Length Option	
Order in increments of 0.1 in. **Standard thread configurations:** Maximum case length: 9.6 in. Minimum case length: 0.8 in. Example: **2 4** = 2.4 in.	
C: Total Length Option	
05	0.5 meter (1.6 feet)
10	1.0 meter (3.3 feet)
15	1.5 meter (4.9 feet)
20	2.0 meters (6.6 feet)
30	3.0 meters (9.8 feet)
50	5.0 meters (16.4 feet)
90	9.0 meters (29.5 feet)

3-meter length option is only available on 330101 probes, and is designed for use with the 9 meter Proximitor sensor only.

5-meter probes are designed for use with the 5 meter Proximitor sensor only.

D: Connector and Cable-Type Option	
01	Miniature coaxial ClickLoc connector with connector protector, standard cable
02	Miniature coaxial ClickLoc connector, standard cable
11	Miniature coaxial ClickLoc connector with connector protector, FluidLoc cable
12	Miniature coaxial ClickLoc connector, FluidLoc cable
E: Agency Approval Option	
00	Not required
05	CSA, ATEX, IECEx Approvals

3300 XL 8 mm Proximity Probes, Metric:

330103 3300 XL 8 mm Probe, M10 x 1 thread, without armor (2)

330104 3300 XL 8 mm Probe, M10 x 1 thread, with armor (2)

Part Number-AA-BB-CC-DD-EE

A: Unthreaded Length Option

Unthreaded length must be at least 20 mm less than the case length.

Order in increments of 10 mm
Length configurations:
Maximum unthreaded length: 230 mm
Minimum unthreaded length: 0 mm
Example: **0 6** = 60 mm

B: Overall Case Length Option

Order in increments of 10 mm
Metric thread configurations:
Maximum case length: 250 mm
Minimum case length: 20 mm
Example: **0 6** = 60 mm

C: Total Length Option

05	0.5 meter (1.6 feet)
10	1.0 meter (3.3 feet)
15	1.5 meter (4.9 feet)
20	2.0 meters (6.6 feet)
50	5.0 meters (16.4 feet)
90	9.0 meters (29.5 feet)

5-meter probes are designed for use with the 5 meter Proximitor sensor only.

D: Connector and Cable-Type Option

01	Miniature coaxial ClickLoc connector with connector protector, standard cable
02	Miniature coaxial ClickLoc connector, standard cable
11	Miniature coaxial ClickLoc connector with connector protector, FluidLoc cable
12	Miniature coaxial ClickLoc connector, FluidLoc cable

E: Agency Approval Option

00	Not required
05	CSA, ATEX, IECEx Approvals

3300 XL 8 mm Reverse Mount Probes

330105-02-12-CC-DD-EE3/8-24 UNF threads(2)

330106-05-30-CC-DD-EE M10 x 1 threads(2)

Option Descriptions

C: Total Length Option

05	0.5 meter (1.6 feet)
10	1.0 meter (3.3 feet)
15	1.5 meter (4.9 feet)
20	2.0 meters (6.6 feet)
50	5.0 meters (16.4 feet)
90	9.0 meters (29.5 feet)

5-meter probes are designed for use with the 5 meter Proximitor sensor only.

D: Connector and Cable-Type Option

02	Miniature ClickLoc coaxial connector
12	Miniature ClickLoc coaxial connector , FluidLoc cable

The FluidLoc cable option –12 is not necessary on the vast majority of 330105 and 330106 installations due to the presence of the probe sleeve. Consider carefully the application before ordering the FluidLoc cable option for these probes.

E: Agency Approval Option

00	Not required
05	CSA, ATEX, IECEx Approvals

3300 XL 8 mm Proximity Probes, Smooth Case:

330140 3300 XL 8 mm Probe without armor(1)

330141 3300 XL 8 mm Probe with armor(1)

Part Number-AA-BB-CC-DD

A: Overall Case Length Option
Order in increments of 0.1 in. **Length configurations:** Maximum unthreaded length: 9.6 in. Minimum unthreaded length: 0.8 in. Example: **24** = 2.4 in.

B: Total Length Option	
05	0.5 meter (1.6 feet)
10	1.0 meter (3.3 feet)
15	1.5 meter (4.9 feet)
20	2.0 meters (6.6 feet)
50	5.0 meters (16.4 feet)
90	9.0 meters (29.5 feet)

5-meter probes are designed for use with the 5 meter Proximitor sensor only.

C: Connector and Cable-Type Option	
01	Miniature coaxial ClickLoc connector with connector protector, standard cable
02	Miniature coaxial ClickLoc connector, standard cable
11	Miniature coaxial ClickLoc connector with connector protector, FluidLoc cable
12	Miniature coaxial ClickLoc connector, FluidLoc cable

D: Agency Approval Option	
00	Not required
05	CSA, ATEX, IECEx Approvals

3300 XL 8 mm Extended Temperature Range (ETR) Proximity Probes:

330191 3300 XL 8 mm ETR Probe, 3/8-24 UNF thread, without armor

330192 3300 XL 8 mm ETR Probe, 3/8-24 UNF thread, with armor

Part Number-AA-BB-CC-DD

A: Unthreaded Length Option
Unthreaded length must be at least 0.8 in. less than the case length.
Order in increments of 0.1 in. **Length configurations:** Maximum unthreaded length: 8.8 in. Minimum unthreaded length: 0.0 in. Example: **1 5** = 1.5 in.

B: Overall Case Length Option
Order in increments of 0.5 in. **Standard thread configurations:** Maximum case length: 9.6 in. Minimum case length: 0.8 in. Example: **2 5** = 2.5 in.

C: Total Length Option	
05	0.5 meter (1.6 feet)
10	1.0 meter (3.3 feet)
15	1.5 meter (4.9 feet)
20	2.0 meters (6.6 feet)
50	5.0 meters (16.4 feet)
90	9.0 meters (29.5 feet)

5-meter probes are designed for use with the 5 meter Proximitor sensor only.

D: Agency Approval Option	
00	Not required
05	CSA, ATEX, IECEx Approvals

3300 XL 8 mm Extended Temperature Range (ETR) Proximity Probes, Metric:

330193 3300 XL 8 mm Probe, M10 x 1 thread, without armor

330194 3300 XL 8 mm Probe, M10 x 1 thread, with armor

Part Number-AA-BB-CC-DD

A: Unthreaded Length Option

Unthreaded length must be at least 20 mm less than the case length.

Order in increments of 10 mm
Length configurations:
Maximum unthreaded length: 230 mm
Minimum unthreaded length: 0 mm
Example: **0 6** = 60 mm

B: Overall Case Length Option

Order in increments of 10 mm
Metric thread configurations:
Maximum case length: 250 mm
Minimum case length: 20 mm
Example: **0 6** = 60 mm

C: Total Length Option	
05	0.5 meter (1.6 feet)
10	1.0 meter (3.3 feet)
15	1.5 meter (4.9 feet)
20	2.0 meters (6.6 feet)
50	5.0 meters (16.4 feet)
90	9.0 meters (29.5 feet)

5-meter probes are designed for use with the 5 meter Proximitor sensor only.

D: Agency Approval Option	
00	Not required
05	CSA, ATEX, IECEx Approvals

3300 XL 8 mm Extended Temperature Range (ETR) Reverse Mount Probes

330195-02-12-CC-DD3/8-24 UNF threads

330196-05-30-CC-DD M10 x 1 threads

C: Total Length Option	
05	0.5 meter (1.6 feet)
10	1.0 meter (3.3 feet)
15	1.5 meter (4.9 feet)
20	2.0 meters (6.6 feet)
50	5.0 meters (16.4 feet)
90	9.0 meters (29.5 feet)

5-meter probes are designed for use with the 5 meter Proximitor sensor only.

D: Agency Approval Option	
00	Not required
05	CSA, ATEX, IECEx approvals

3300 XL 8 mm Extended Temperature Range (ETR) Proximity Probes, Smooth Case:

330197 3300 XL 8 mm Probe without armor 1

330198 3300 XL 8 mm Probe with armor 1

Part Number-AA-BB-CC

A: Overall Case Length Option
Order in increments of 0.5 in. **Length configurations:** Maximum unthreaded length: 9.5 in. Minimum unthreaded length: 1.0 in. Example: **3 5** = 3.5 in.

B: Total Length Option	
05	0.5 meter (1.6 feet)
10	1.0 meter (3.3 feet)
15	1.5 meter (4.9 feet)
20	2.0 meters (6.6 feet)
50	5.0 meters (16.4 feet)
90	9.0 meters (29.5 feet)

5-meter probes are designed for use with the 5 meter Proximitor sensor only.

C: Agency Approval Option	
00	Not required
05	CSA, ATEX, IECEx Approvals

Aluminum probe clamp bracket[1]

137491-AA

A: Mounting screw option	
01	10-24 UNC-2A mounting screws
02	M5 x 0.8-6g mounting screws

The aluminum clamp bracket is an unthreaded mounting bracket designed for use with the smooth case probes (330140, 330141, 330197 and 330198). After gapping the probe, tighten the clamp bracket by tightening the screws. The mounting screws have pre-drilled holes for safety wire.

Aluminum probe threaded mounting bracket

137492-AA

A: Thread size	
01	3/8-24
04	M10 x 1

The aluminum probe threaded mounting bracket is the standard mounting bracket for most 3300 and 3300 XL probe installations. The -01 option includes two 10-24 UNC-2A mounting screws. The -04 option includes two M5 x 0.8-6g mounting screws. The mounting screws have pre-drilled holes for safety wire.

Phenolic threaded probe mounting bracket

27474-AA

A: Thread size	
01	3/8-24
04	M10 x 1

Bently Nevada recommends the phenolic threaded mounting bracket if your application requires additional electric isolation from the mounting location (as in some generator and electrical motor bearing locations). The -01 option includes two 10-24 UNC-2A mounting screws. The -04 option includes two M5 x 0.8-6g mounting screws. The mounting screws have pre-drilled holes for safety wire.

Probe Ordering Information Notes:

1. Mounting clamps must be ordered separately for 330140, 330141, 330197, and 330198.

2. For a shorter delivery time, order commonly stocked probes. The following part numbers are currently stocked probes:

330101-00-08-05-02-00, 330101-00-08-05-02-05, 330101-00-08-10-02-00, 330101-00-08-10-02-05, 330101-00-12-10-02-00, 330101-00-12-10-02-05, 330101-00-16-10-02-00, 330101-00-16-10-02-05, 330101-00-20-05-02-00, 330101-00-20-10-02-00, 330101-00-20-10-02-05, 330101-00-30-10-02-00, 330101-00-30-10-02-05, 330101-00-40-05-02-00, 330101-00-40-10-02-00, 330101-00-40-10-02-05, 330101-00-60-10-02-00, 330101-00-60-10-02-05, 330102-00-20-10-02-00, 330103-00-02-10-02-05, 330103-00-04-10-02-00, 330103-00-05-10-02-00, 330104-00-06-10-02-00, 330104-01-05-50-02-00, 330105-02-12-05-02-00, 330105-02-12-05-02-05, 330105-02-12-10-02-00, 330105-02-12-10-02-05, 330106-05-30-05-02-00, 330106-05-30-05-02-05, 330106-05-30-10-02-00, 330106-05-30-10-02-05.

Ordering Information for Proximitor Sensor

3300 XL Proximitor Sensor

330180-AA-BB

A: Total Length and Mounting Option	
10	1.0 meter (3.3 feet) system length, panel mount
11	1.0 meter (3.3 feet) system length, DIN mount
12	1.0 meter (3.3 feet) system length, no mounting hardware
50	5.0 meters (16.4 feet) system length, panel mount
51	5.0 meters (16.4 feet) system length, DIN mount
52	5.0 meters (16.4 feet) system length, no mounting hardware
90	9.0 meters (29.5 feet) system length, panel mount
91	9.0 meters (29.5 feet) system length, DIN mount
92	9.0 meters (29.5 feet) system length, no mounting hardware
B: Agency Approval Option	
00	Not required
05	CSA, ATEX, IECEx Approvals

Ordering Information for Extension Cables

3300 XL Standard Extension Cable

330130-AAA-BB-CC

Make sure that the extension cable length and the probe length, when added together, equal the Proximitor Sensor total length.

A: Cable Length Option	
030	3.0 meters (9.8 feet)
035	3.5 meters (13.1 feet)
040	4.0 meters (11.5 feet)
045	4.5 meters (14.8 feet)
060	6.0 meters (19.7 feet)
070	7.0 meters (22.9 feet)
075	7.5 meters (24.6 feet)
080	8.0 meters (26.2 feet)
085	8.5 meters (27.9 feet)
B: Connector Protector and Cable Option	
00	Standard cable
01	Armored cable
02	Standard cable with connector protector

03	Armored cable with connector protector
10	FluidLoc cable
11	Armored FluidLoc cable
12	FluidLoc cable with connector protector
13	Armored FluidLoc cable with connector protector
C: Agency Approval Option	
00	Not required
05	CSA, ATEX, IECEx Approvals

3300 XL Extended Temperature Range (ETR) Extension Cable

330190-AAA-BB-CC

Make sure that the extension cable length and the probe length, when added together, equal the Proximitor Sensor total length.

A: Cable Length Option	
030	3.0 meters (9.8 feet)
035	3.5 meters (13.1 feet)
040	4.0 meters (11.5 feet)
045	4.5 meters (14.8 feet)
070	7.0 meters (22.9 feet)
075	7.5 meters (24.6 feet)
080	8.0 meters (26.2 feet)
085	8.5 meters (27.9 feet)
B: Cable Option	
00	Standard cable
01	Armored cable
C: Agency Approval Option	
00	Not required
05	CSA, ATEX, IECEx Approvals

Accessories

141078	3300 XL 8 mm and 3300 5 mm Proximity Transducer System Manual.
175751	3300 XL Multi-Purpose Stainless Steel Housing. 12”x12”x6”. Can hold up to 8 Proximitor Sensors in a DIN-mount configuration or 6 Proximitor Sensors in a panel-mount configuration. (Available with ATEX/IECEx Zone 2 type << u >> certifications).
176467	3300 XL Multi-Purpose Stainless Steel Housing. 12”x8”x6”. Can hold up to 4 3300XL Proximitor Sensors in both DIN-mount and panel-mount configurations. (Available with ATEX/IECEx Zone 2 type << u >> certifications).
330181	3300 XL Multi-Purpose Stainless Steel Housing. 13”x9.5”x7”. Can hold up to 8 Proximitor sensors in a DIN-mount configuration or 6 Proximitor Sensors in a panel-mount configuration. Primarily used by customers requiring hazardous area approvals fro their installations. Available with North American type 4x certification suitable for installation in Div 2.
02120015	Bulk field wire. 1.0 mm2 (18 AWG), 3 conductor, twisted, shielded cable with drain wire. Specify length in feet.
138492-01	Replacement panel-mount mounting pad.
138493-01	Replacement DIN-mount mounting pad.

148722-01	3300 XL test plug. The 3300 XL Test Plug contains 3 small test pins attached to 3 color-coded 1-meter wires, each terminated in a banana plug. The 3-pin adapter plugs into the test pin holes on 3300 XL-style Proximitor sensors. You can use this test plug to check the performance of the Proximitor sensor from the test pin holes in the terminal strip without removing the field wiring.
04310310	3300 XL Proximitor Sensor panel-mount screw. One 6-32 UNC thread forming mounting screw. Four screws are required for each Proximitor sensor. (Screws supplied standard with Proximitor housings [3300 XL panel-mount option]).
03200006	Silicone self-fusing tape. A 9.1-meter (10-yard) roll of silicone tape to protect connectors. This tape is easy to install and provides excellent electrical isolation and protection from the environment. We do not recommend using this tape inside the casing of the machine.
40113-02	Connector Protector Kit. Connector Protector Kit for 3300 XL 8 mm probes and extension cables, including connector protectors and installation tools.
136536-01	Connector protector adapter. This allows you to use connector protector installation tools manufactured prior to 1998 with 75Ω ClickLoc connectors.
40180-02	Connector protectors. Package contains 10 pairs of connector protectors for 3300 XL 8 mm probes and extension cables.
03839410	75Ω triaxial male connector protector. Male connector protectors install onto the extension cable and attach to the female connector protector on the probe, providing environmental protection of connectors.
03839420	75Ω triaxial female connector protector. Female connector protectors install onto the probe lead and attach to the male connector protector on the extension cable, providing environmental protection of connectors. You can also place the connector protector onto the extension cable to slide over the connection to the Proximitor sensor to protect that connection from the environment.
04301007	3/8-24 probe lock nut with safety wire holes. Single probe lock nut with 2 holes drilled through the nut in order to secure the lock nut in place with safety wire.
04301008	M10 x 1 probe lock nut with safety wire holes. Single probe lock nut with 2 holes drilled through the nut in order to secure the lock nut in place with safety wire.
330153-01	3300 XL connector kit. Used on 3300 XL 8 mm probes and extension cables. Contains 1 pair each of male and female ClickLoc connectors, 2 color-coded sleeves, 2 pieces of slit FEP tubing, and 1 strip of silicone tape.

330153-09	3300 XL ETR Connector Kit. Used on ETR 3300 XL 8mm probes and 3300 ETR XL extension cables. Contains one pair of male and female ClickLoc connectors, two color-coded sleeves, two pieces of high temperature slit FEP tubing, and one strip of silicon tape.
163356	Connector Crimp Tool Kit. Includes 1 set of multiconnector inserts and connector installation instructions. Compatible only with 330153 connector kits or with probes shipped in 2003 or later with ClickLoc connectors uninstalled. Supplied with carrying case.

Graphs and Figures

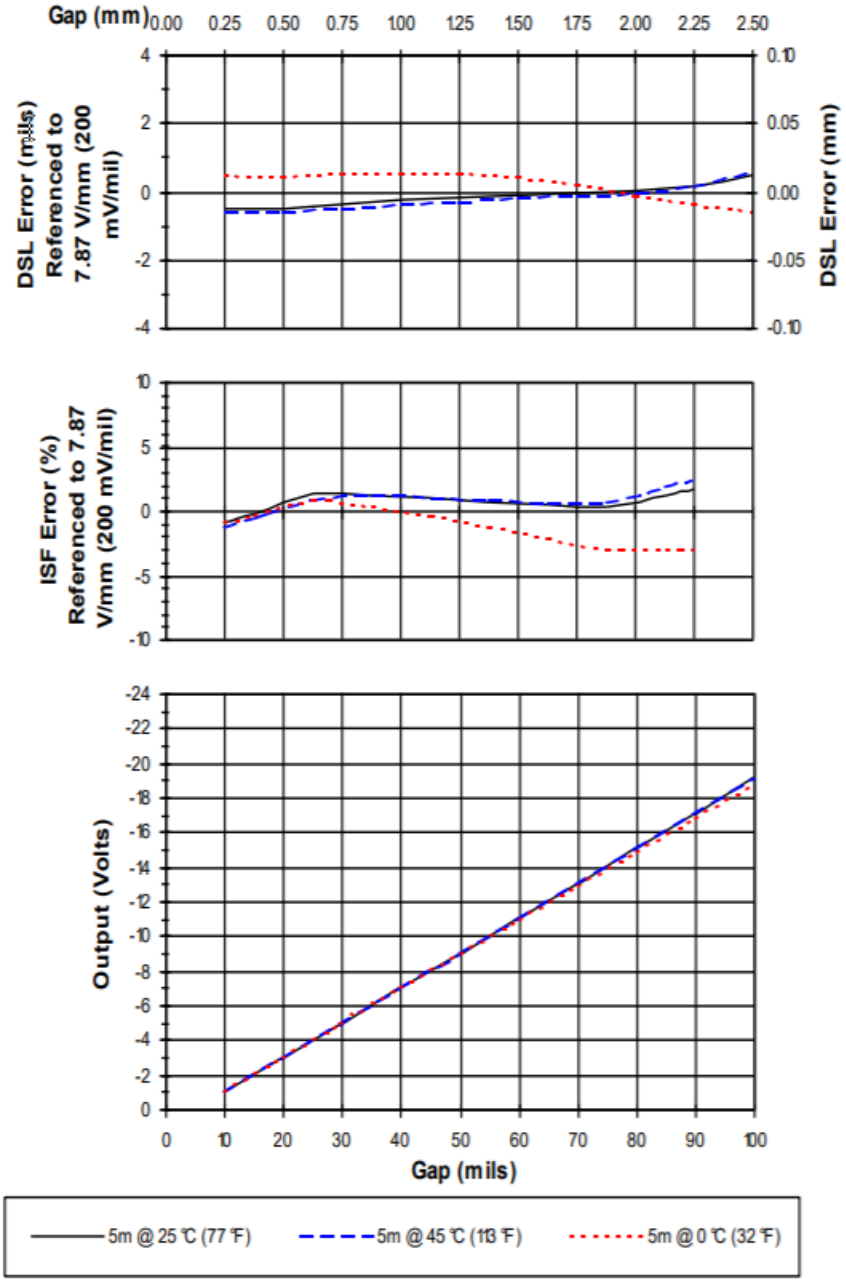

Figure 1: Typical 3300 XL 8 mm 5 m or 1 m System over API 670 Range

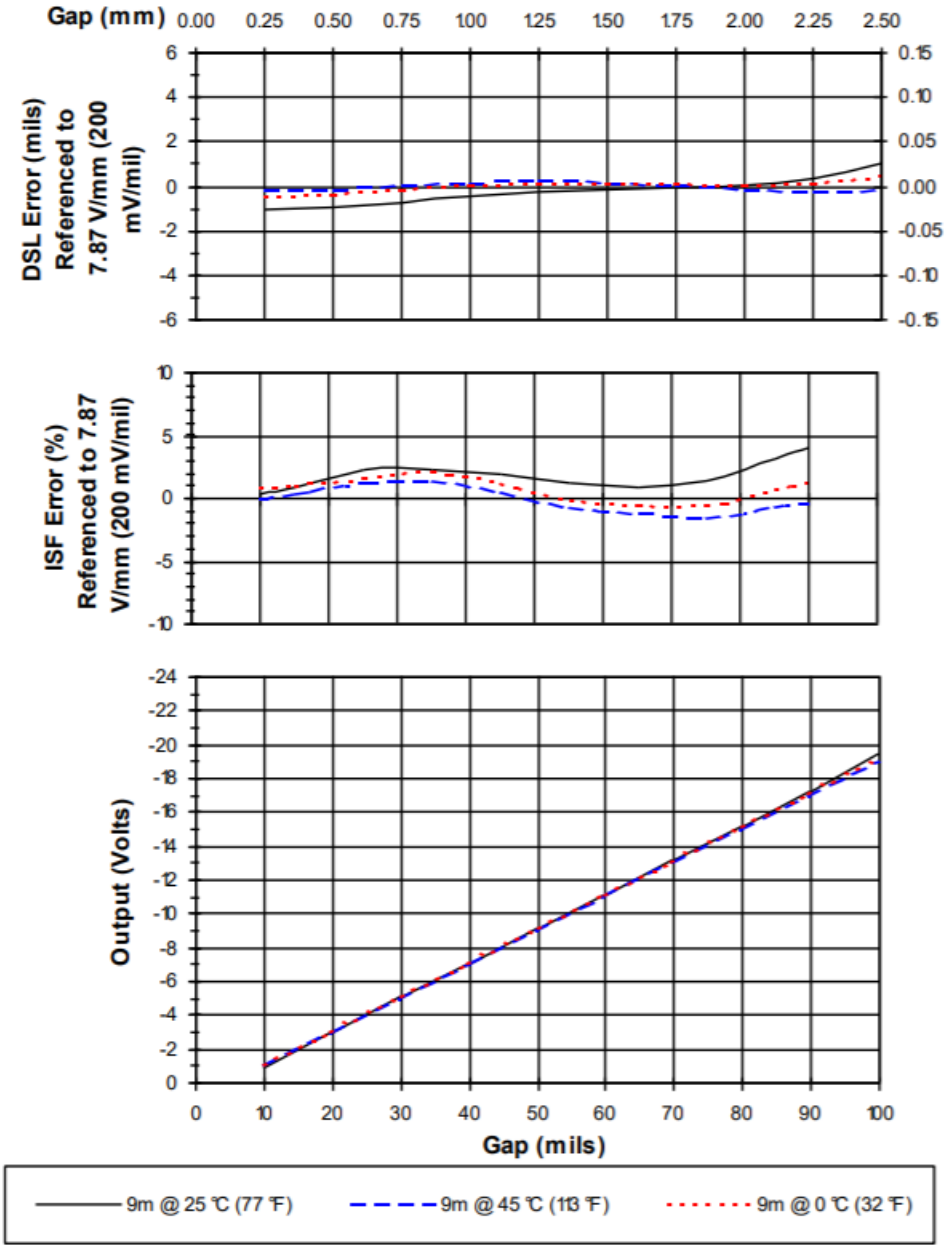

Figure 2: Typical 3300 XL 8 mm 9 m System over API 670 Testing Range

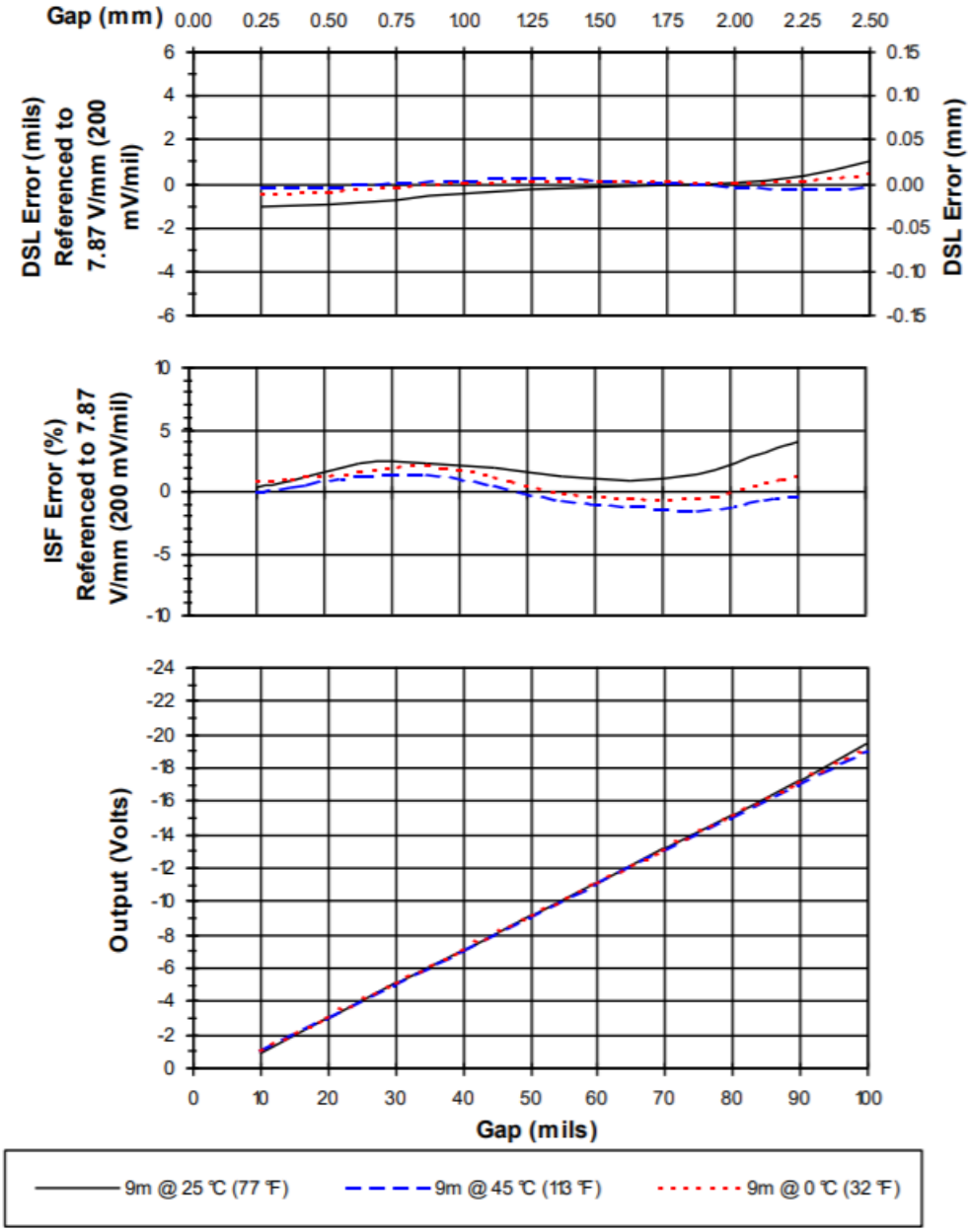

Figure 3: Typical 3300 XL 8 mm Probe over API 670 Operating Range

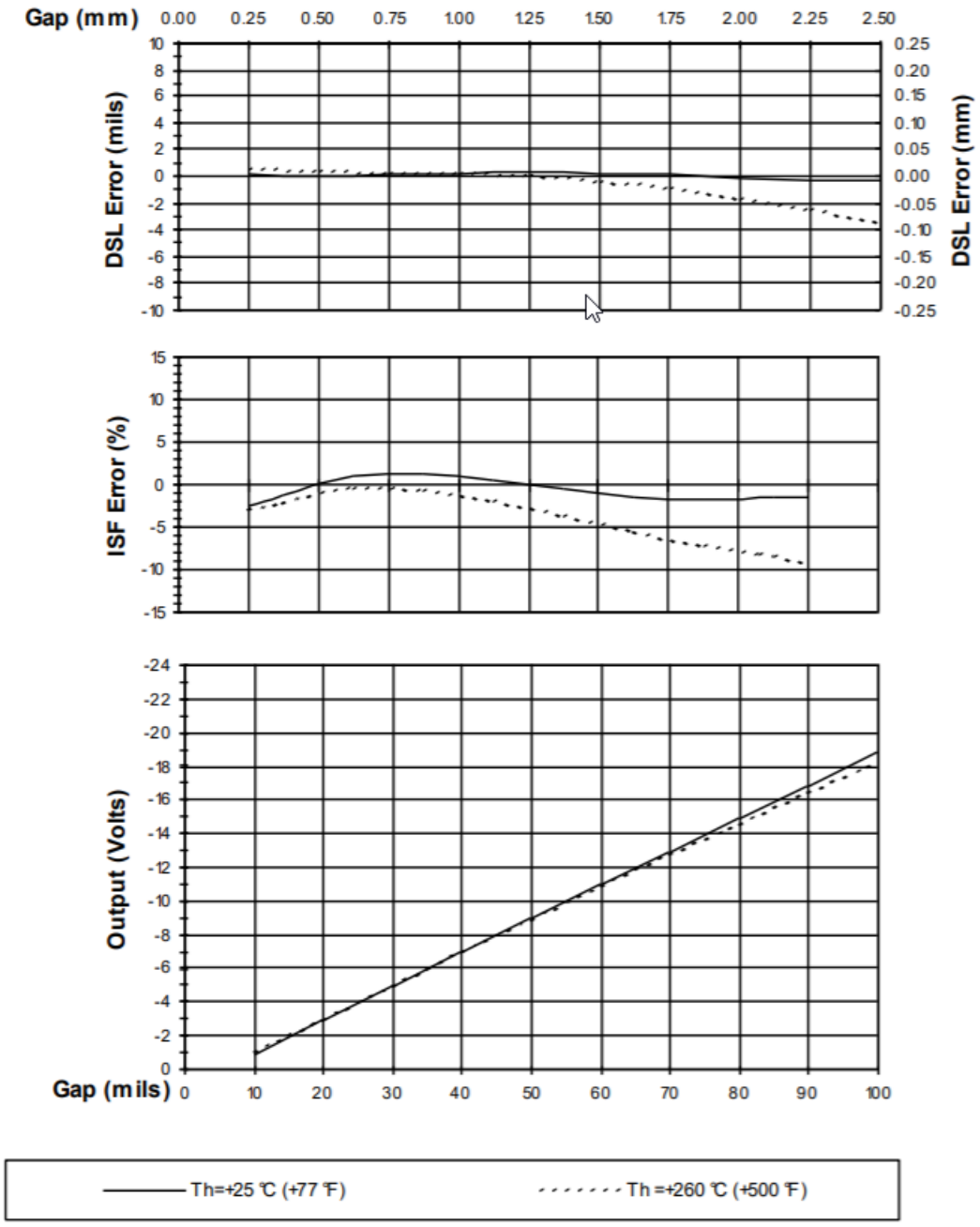

Figure 4: Typical 3300 XL 8 mm 5 m Proximitor Sensor with 4 m Extension Cable at T_c (Probe is at 25°C)

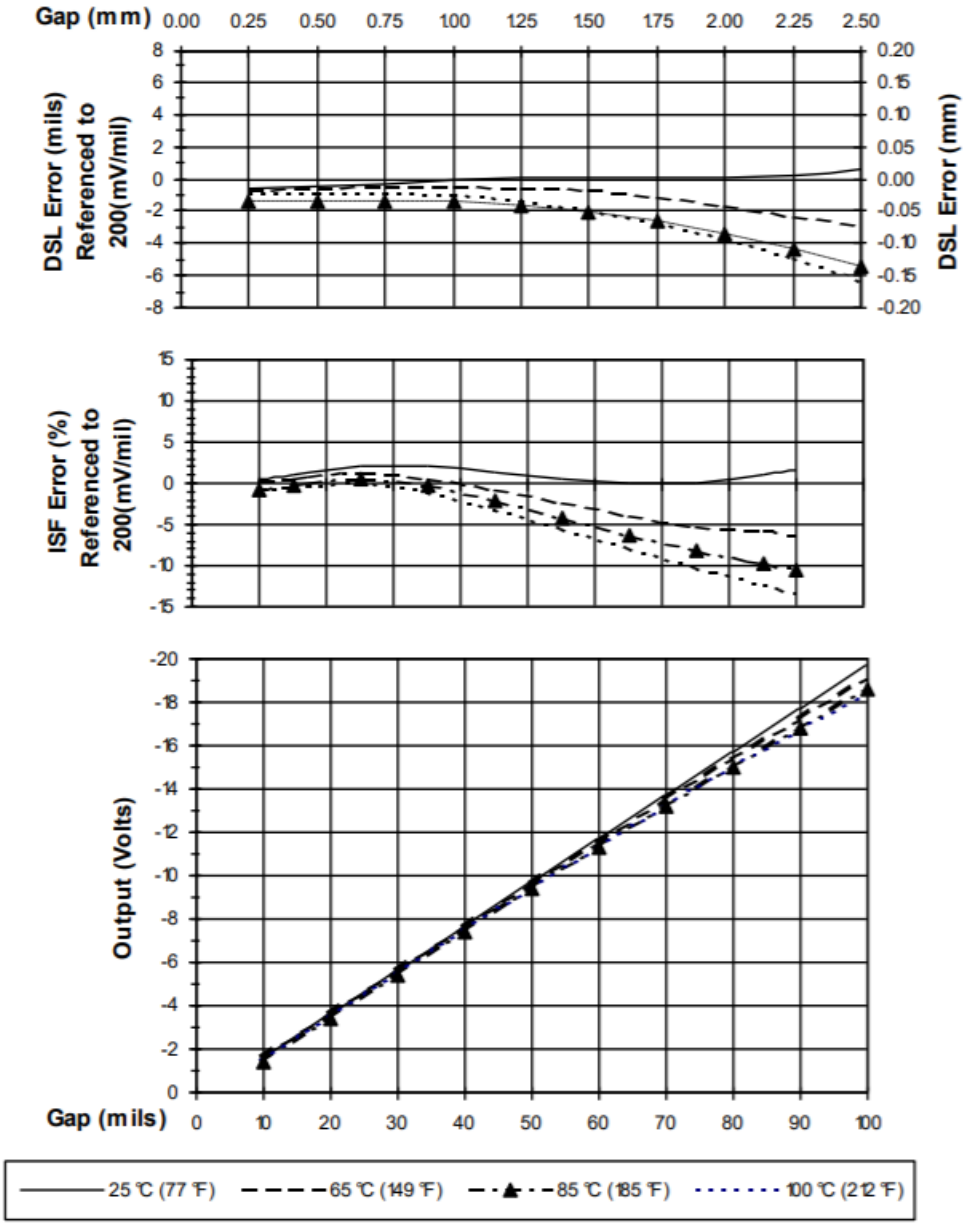

Figure 5: Typical 3300 XL 8 mm 5 m Proximitor Sensor with 4 m Extension Cable at T_h (Probe is at 25°C)

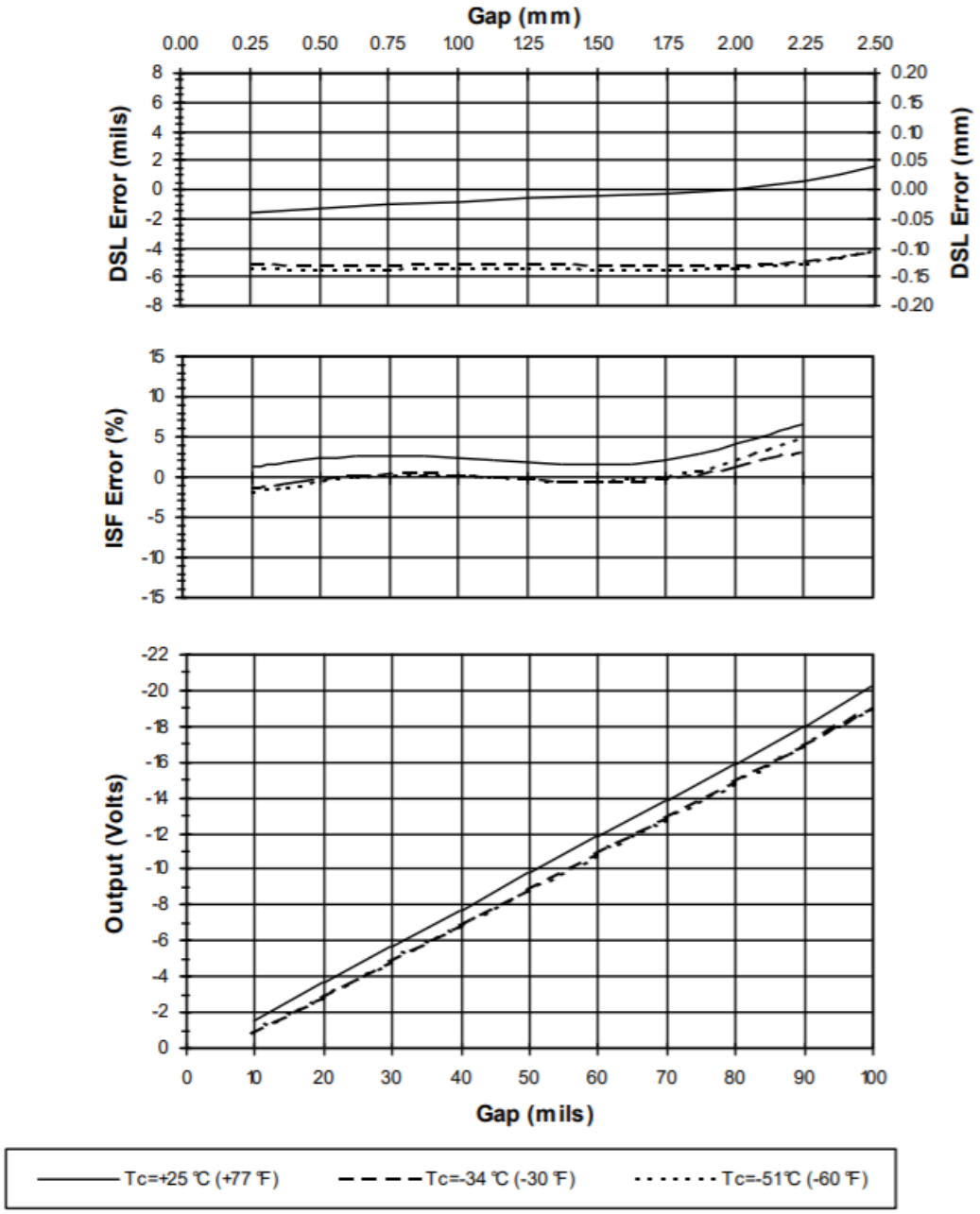

Figure 6: Typical 3300 XL 8 mm 9 m Proximitor Sensor with 8 m of Extension Cable at T_c (Probe is at 25°C)

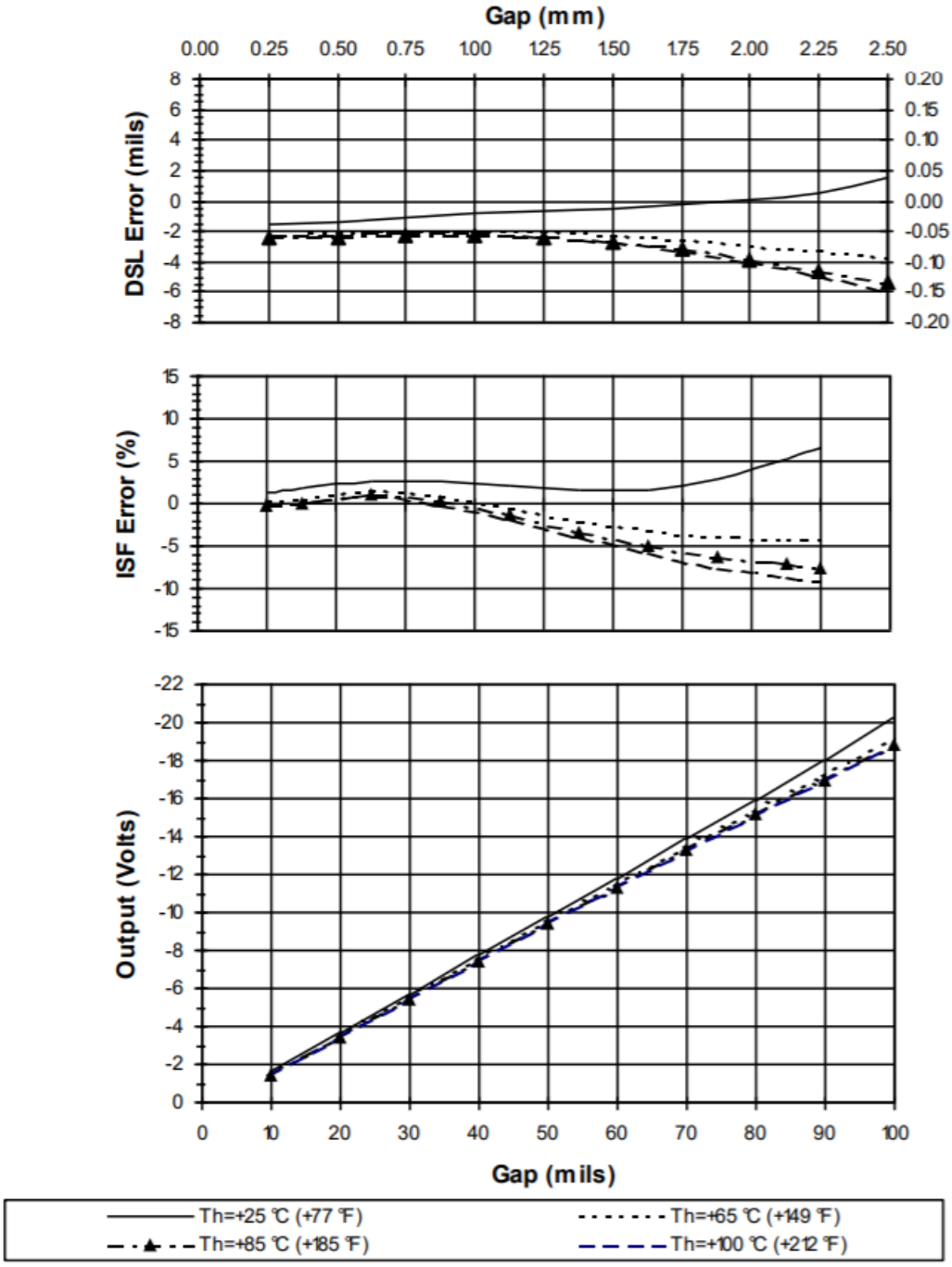

Figure 7: Typical 3300 XL 8 mm 9 m Proximitor Sensor with 8 m Extension Cable at T_h (Probe is at 25°C)

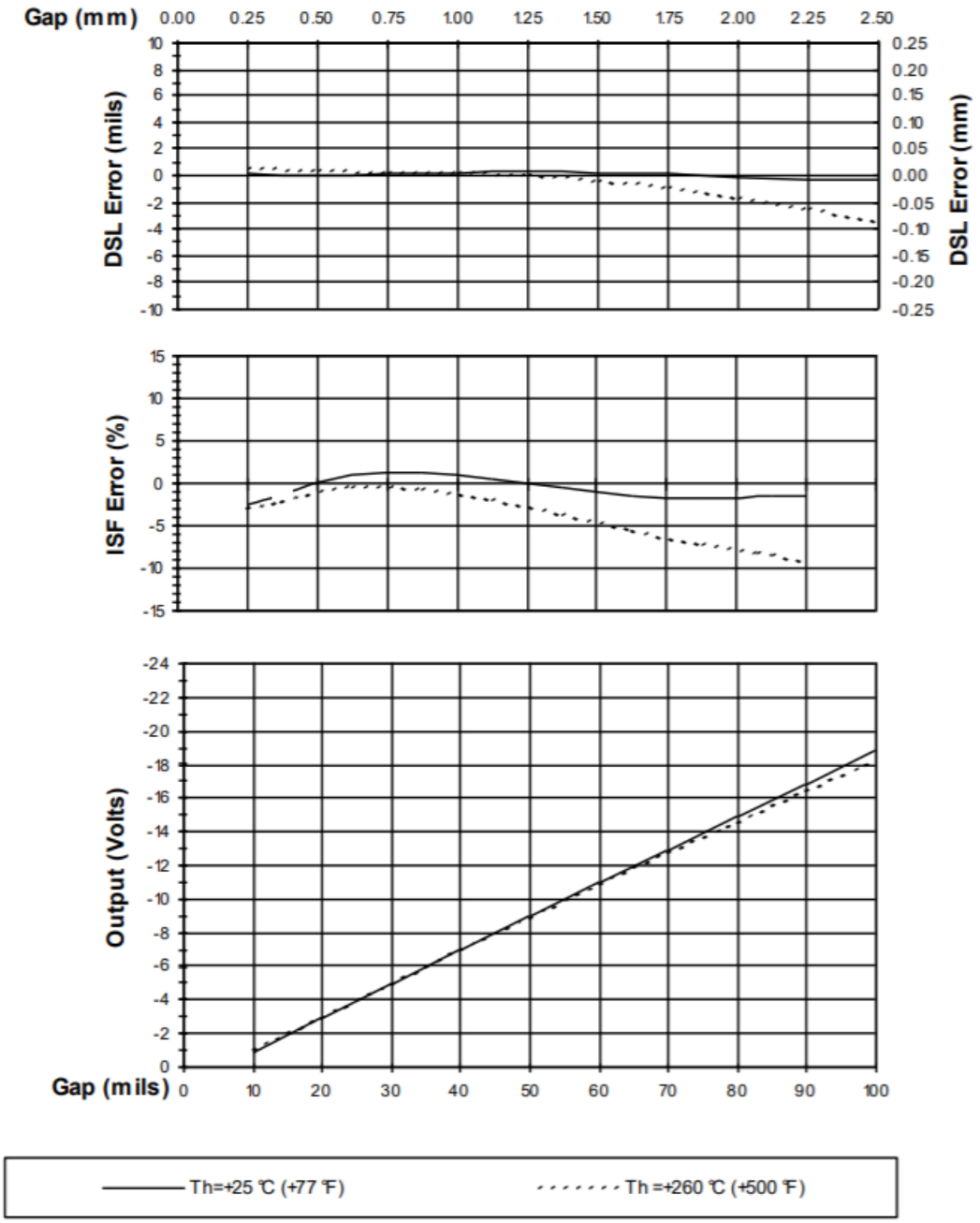

Figure 8: Typical 3300 XL Extended Temperature Range Probe and 4 m Extended Temperature Range Extension Cable at T_h (Proximitor Sensor and Probe Tip with 1-foot Cable are at +25°C)

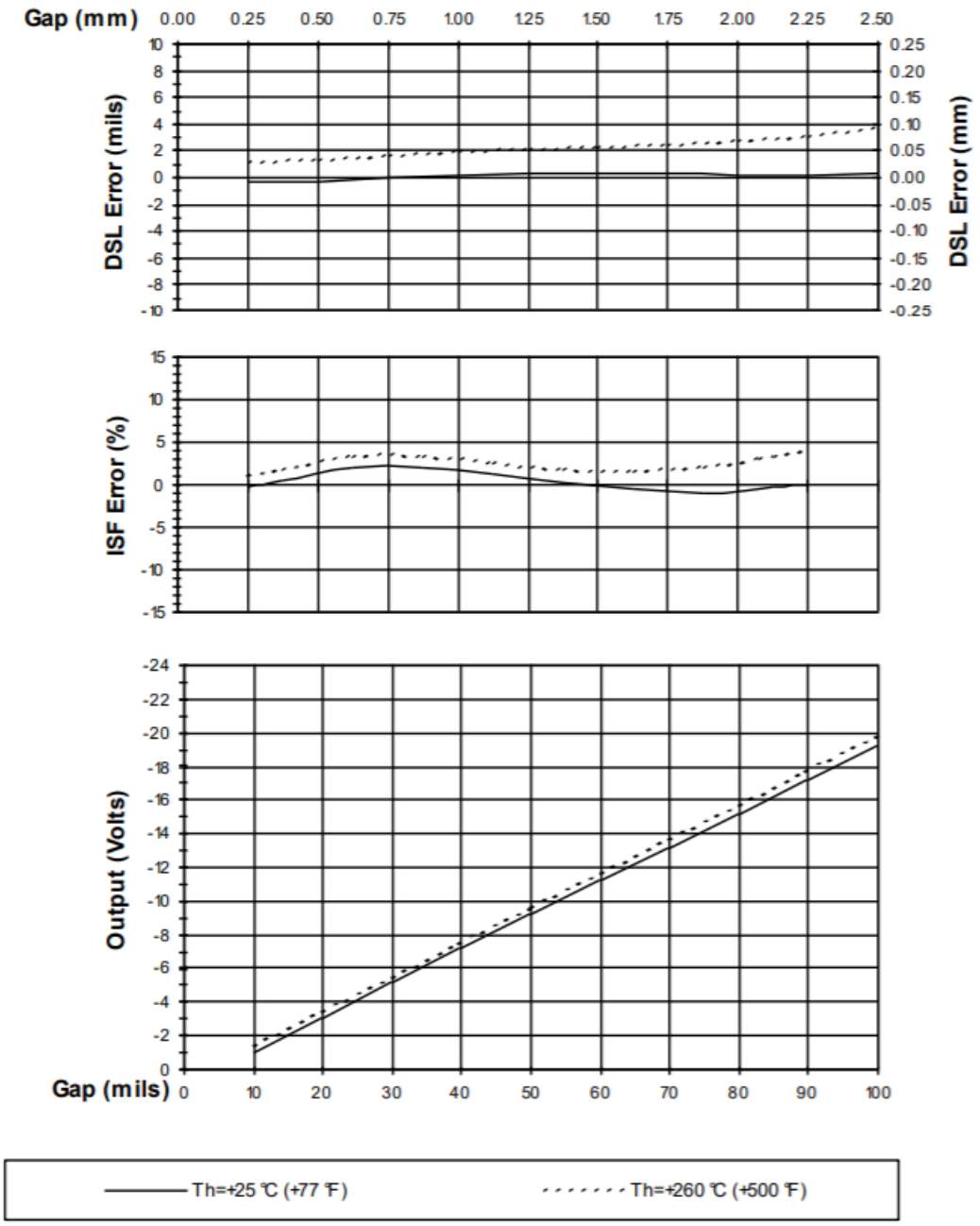

Figure 9: Typical 3300 XL Extended Temperature Range Probe and 8 m Extended Temperature Range Extension Cable at T_h (Proximitor Sensor and Probe Tip with 1-foot Cable are at +25°C)

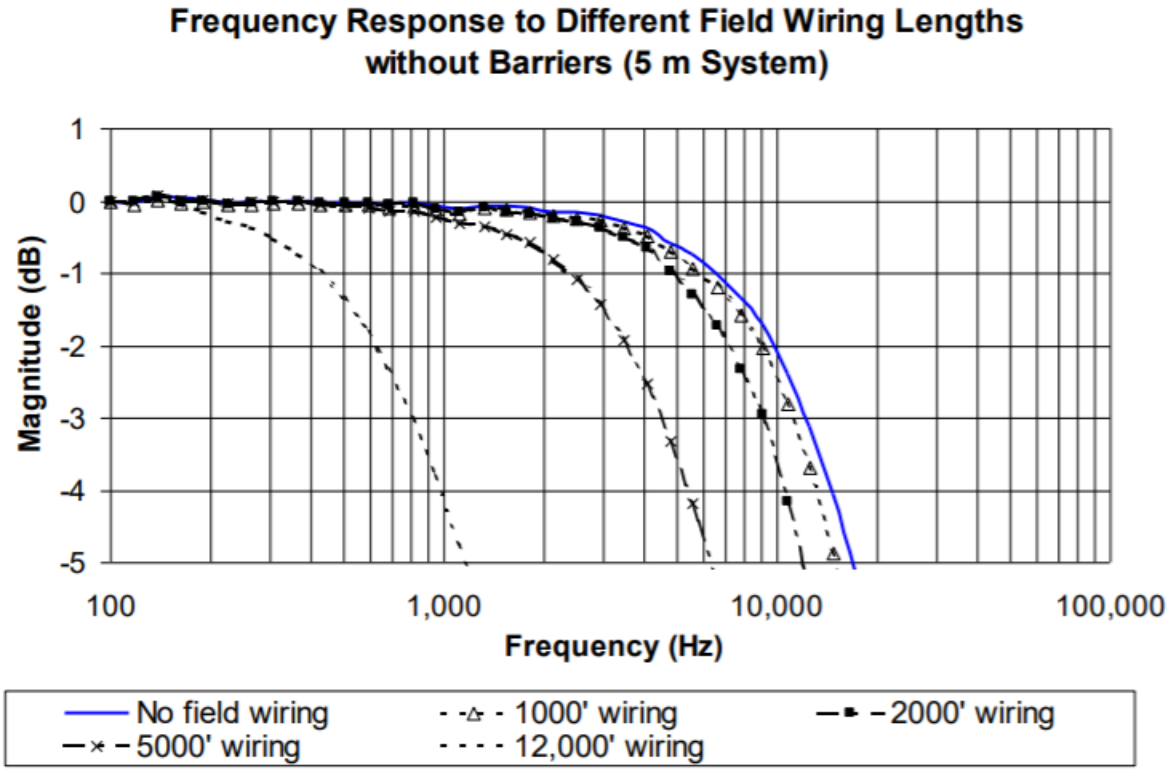

Figure 10: Frequency Response, Typical 3300 XL 8 mm 5 m or 1 m System with Varying Lengths of Field Wiring Attached, No Barriers

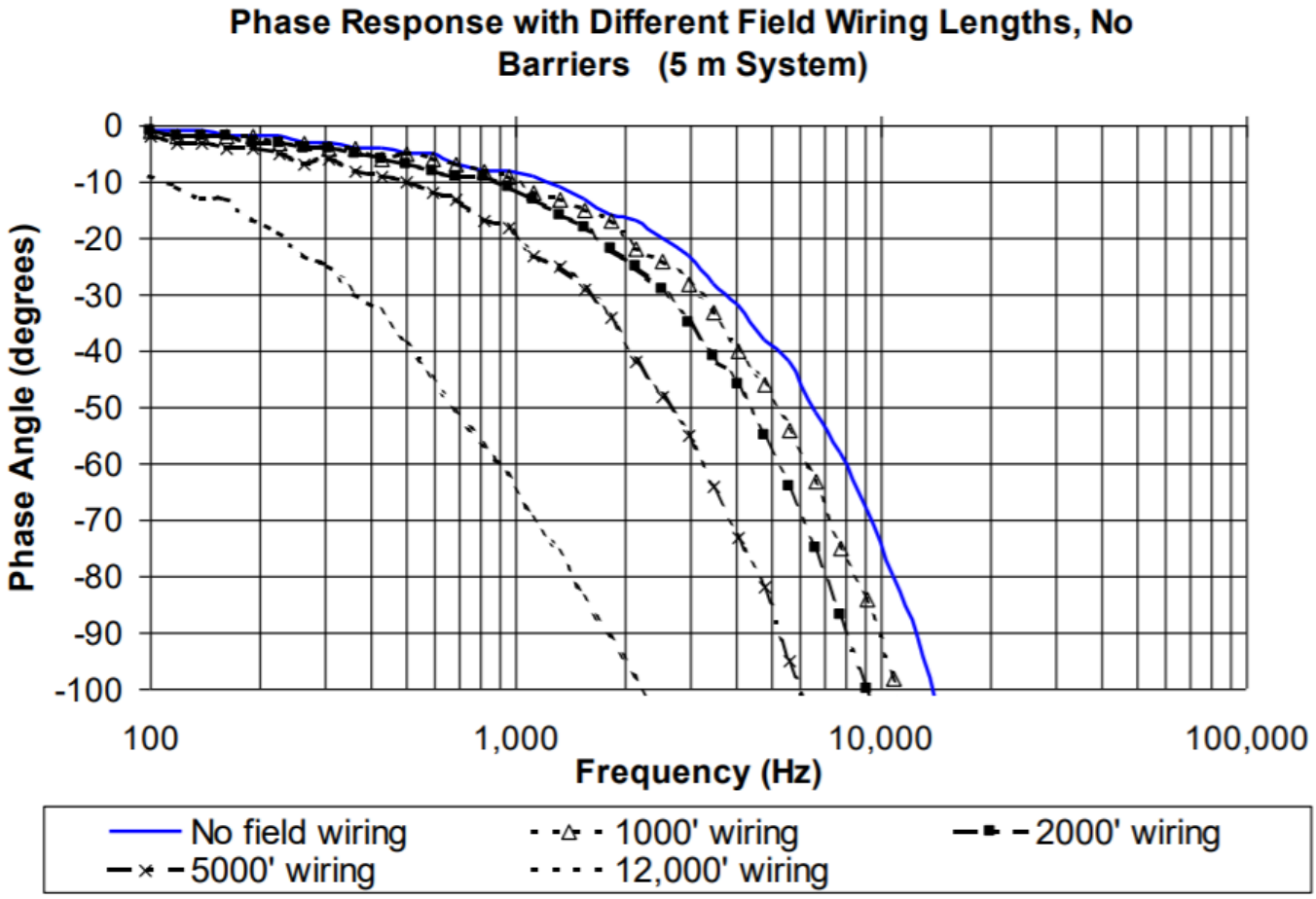

Figure 11: Phase Response, Typical 3300 XL 8 mm 5 m or 1 m System with Varying Lengths of Field Wiring Attached, No Barriers

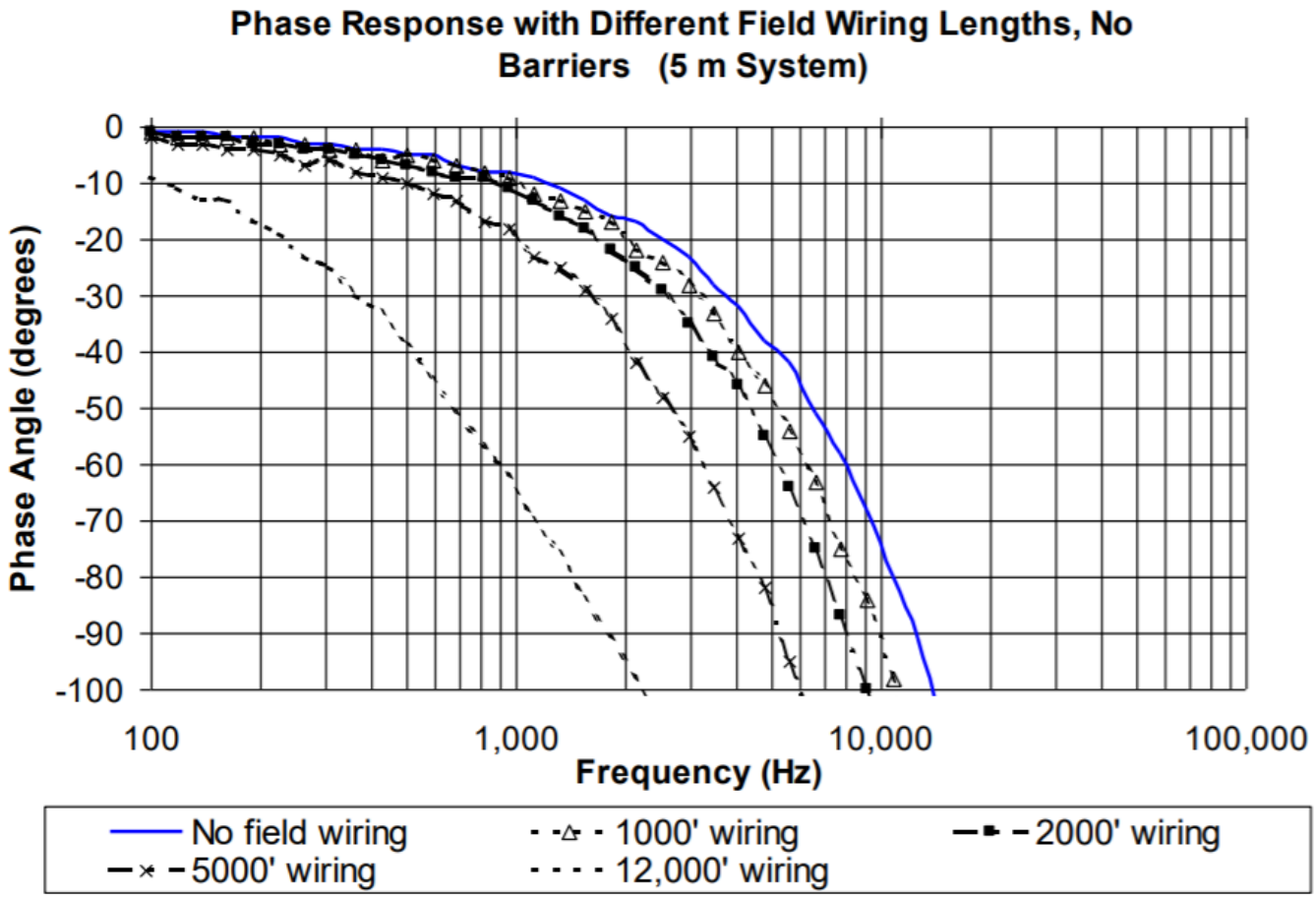

Figure 12: Frequency Response, Typical 3300 XL 8 mm 9 m System with Varying Lengths of Field Wiring Attached, No Barriers

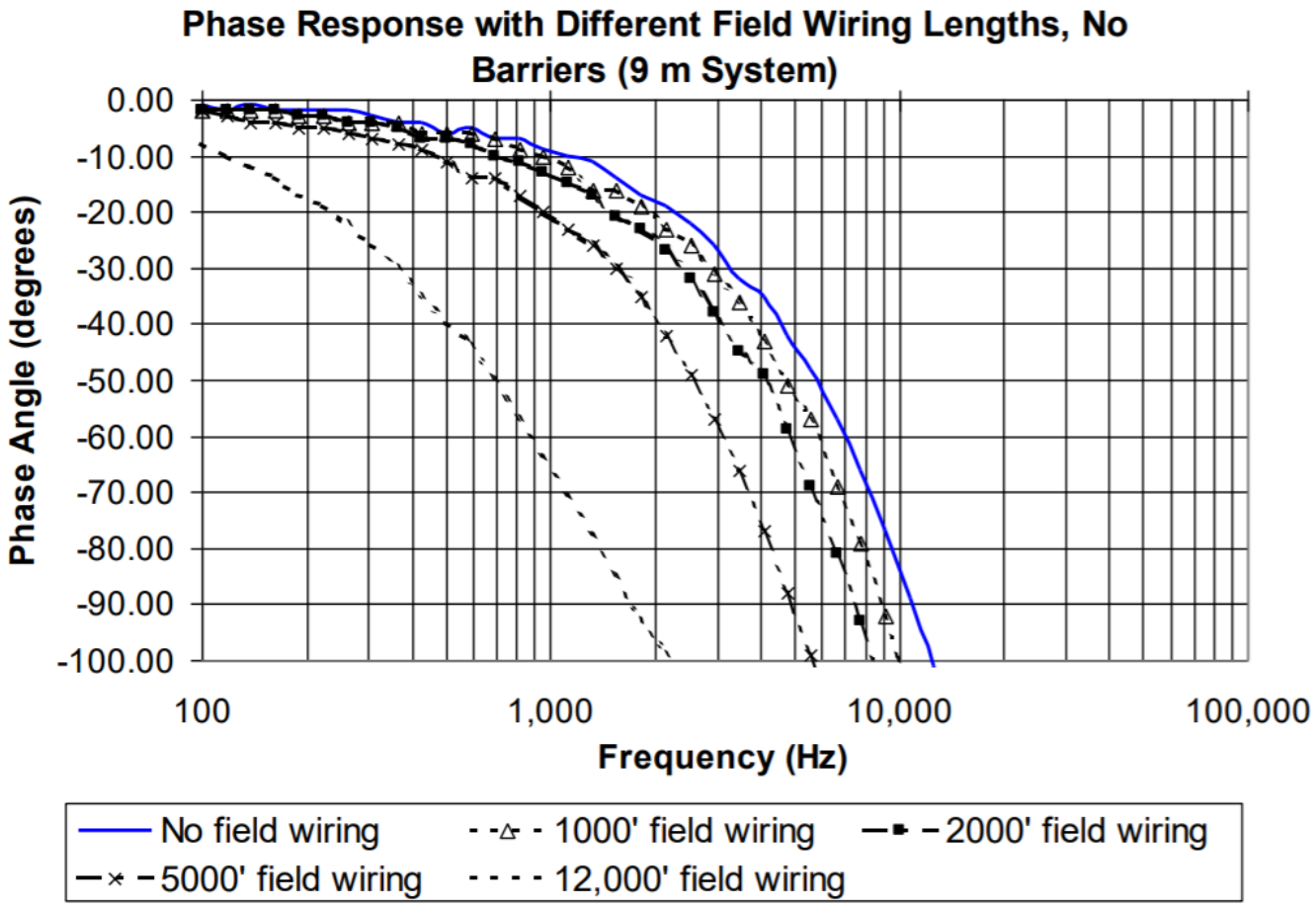

Figure 13: Phase Response, Typical 3300 XL 8 mm 9 m System with Varying Lengths of Field Wiring Attached, No Barriers

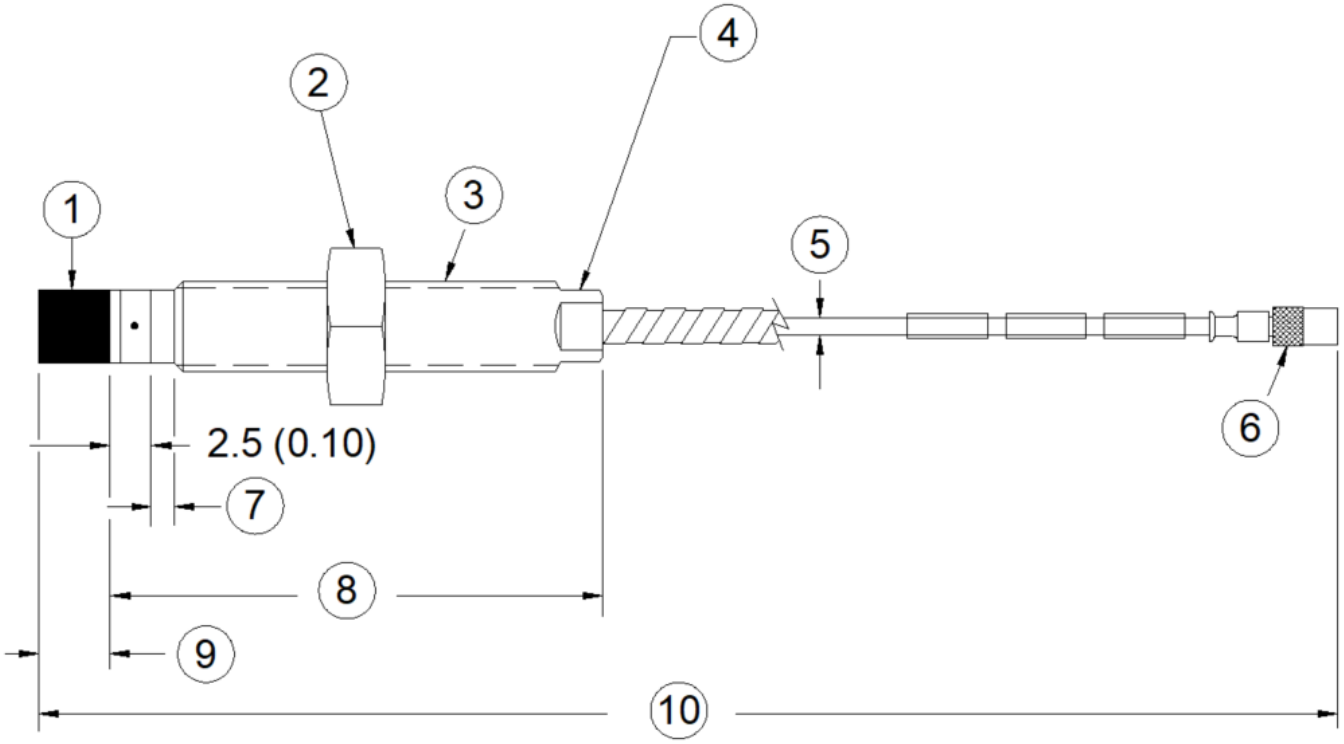

1. Probe tip, 8.0 mm (0.31 in) diameter
2. 9/16 in for 3/8-24 threads, M17 for M10 threads (see Note 2)
3. Case thread
4. 5/16 in wrench flats for 3/8-24 threads; 8mm wrench flats for M10 threads.
5. 75 Ω cable, 3.68 mm (0.145 in) maximum outside diameter, 3.94 mm (0.155 in) maximum outside diameter for FluidLoc cable, 7.67 mm (0.302 in) outside diameter of armor, 9.5 mm (0.38 in) maximum diameter of armor ferrule
6. Miniature male coaxial connector, 7.24 mm (0.285 in) maximum outside diameter “D”
7. Unthreaded length “A”
8. Case length “B”
9. 6.0 mm (0.235 in) maximum
10. Total length “C”, +30%, -0%[3]

Figure 14: 3300 XL 8 mm Proximity Probes, Standard Mount

330101 and 330191, 3/8-24 UNF-2A, without armor [7]

330102 and 330192, 3/8-24 UNF-2A, with armor [6]

330103 and 330193, M10X1 thread, without armor [7]

330104 and 330194, M10X1 thread, with armor [6]

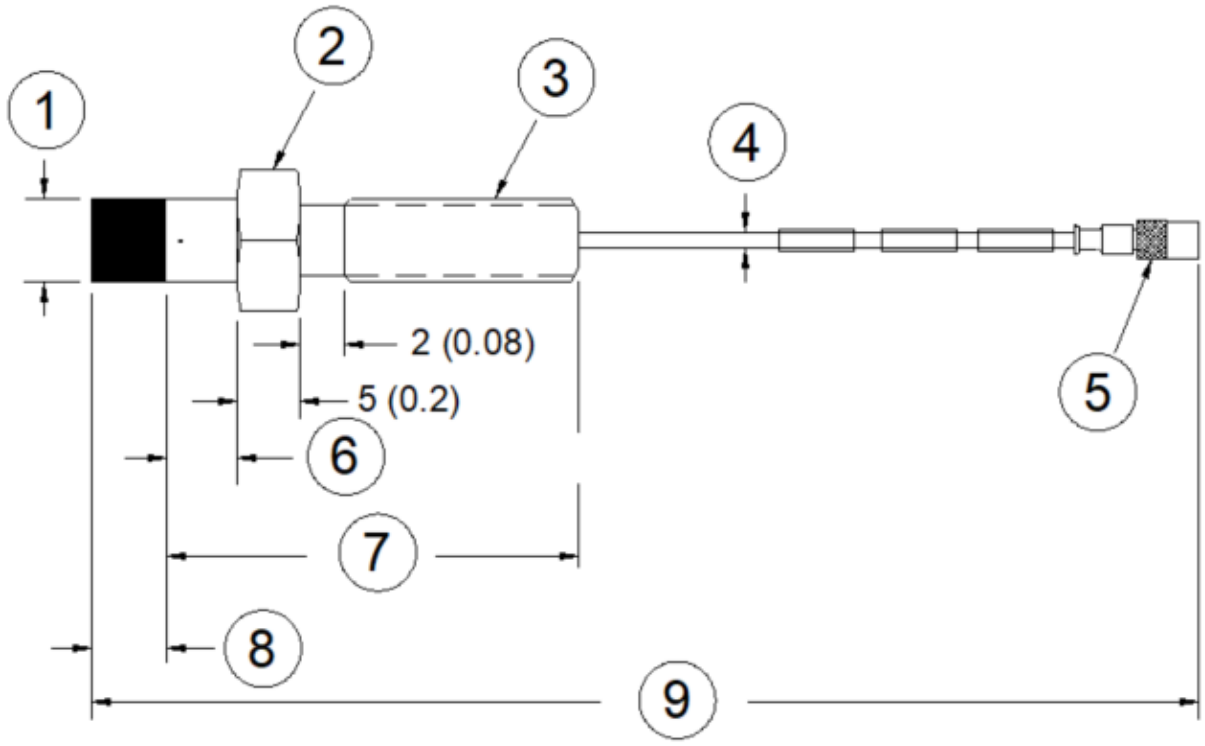

1. Probe tip, 8.0 mm (0.31 in) diameter
2. 7/16 in or M10 hexagonal
3. Case thread
4. 75 Ω cable, 3.68 mm (0.145 in) outside diameter
5. Miniature male coaxial connector, 7.24 mm (0.285 in) maximum outside diameter “D”
6. Unthreaded length “A”, 5.0 mm (0.20 in)
7. Case length “B”, 30 mm (1.2 in)
8. 6.0 mm (0.235 in) maximum
9. Total length “C”, +30%, -0%[3]

Figure 15: 3300 XL 8 mm Proximity Probes, Reverse Mount [4, 7]

330105 and 330195, 3/8-24 UNF-2A threads

330106 and 330196, M10X1 threads

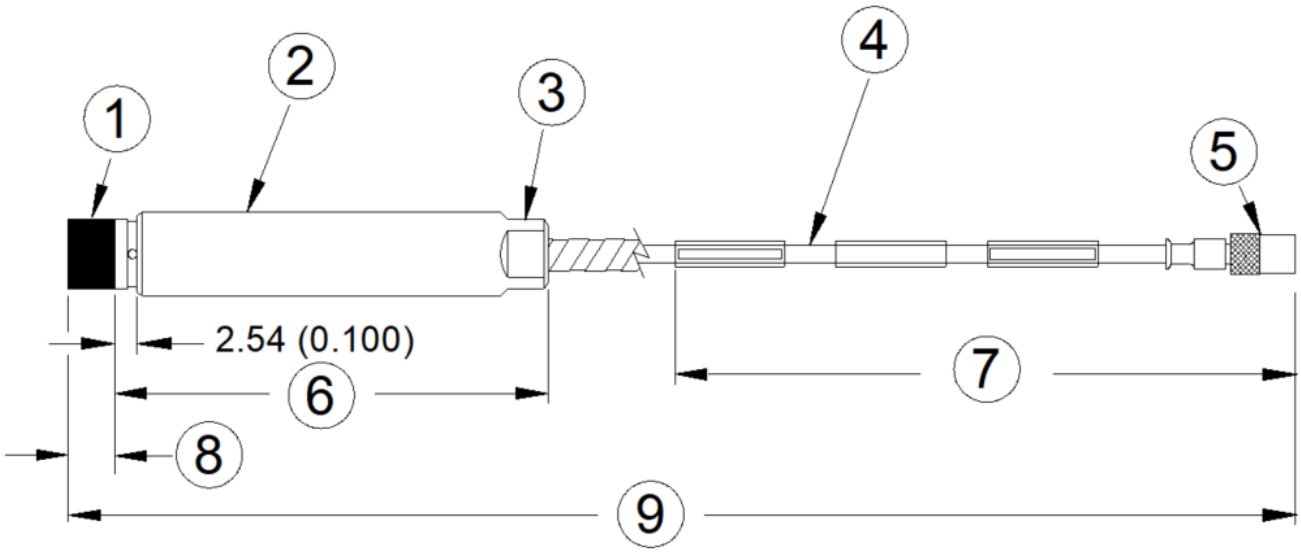

1. Probe tip, 8 mm (0.31 in) diameter
2. 9.66 mm (0.38 in) maximum diameter
3. 5/16 in wrench flats, 4 each
4. 75Ω cable, 3.68 mm (0.145 in) maximum diameter, 3.94 mm (0.155 in) maximum diameter for FluidLoc cable, 7.67 mm (0.302 in) outside diameter with armor, 10.2 mm (0.4 in) maximum diameter for armor ferrule
5. Miniature male coaxial connector, 7.24 mm (0.285 in) maximum outside diameter “D”
6. Case length “A”,
7. 349.3 (13.75) max. distance
8. 6.0 mm (0.235 in) maximum
9. Total length “C”, +30%, -0%[3]

Figure 16: 3300 XL 8 mm Proximity Probes, Smooth Case

330140 and 330197, without armor [7]

330141 and 330198, with armor [6]

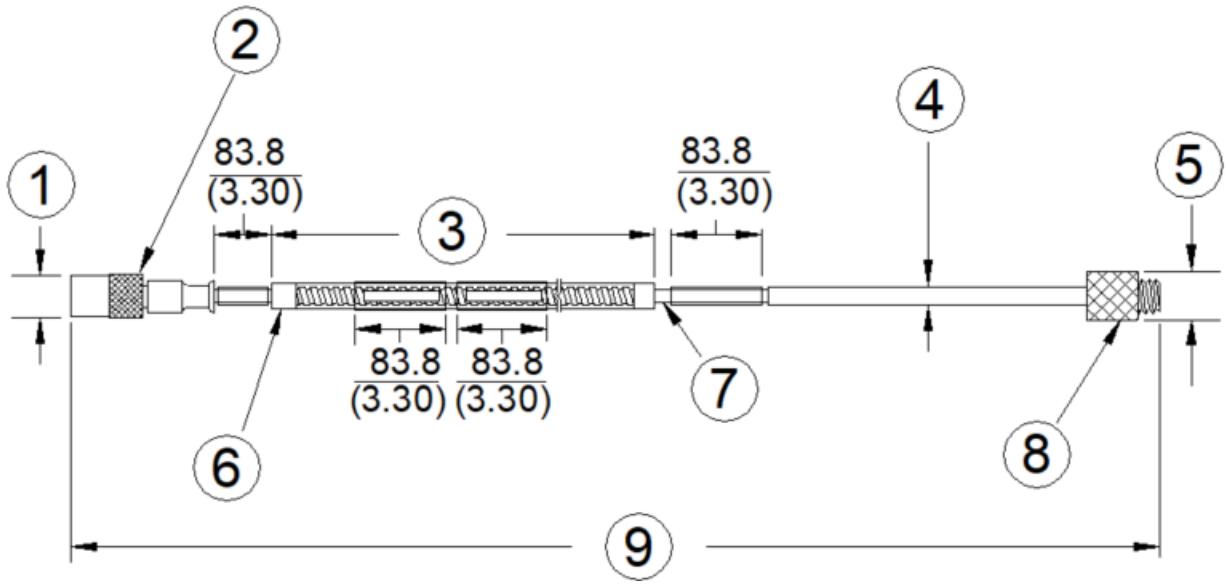

1. 7.24 mm (0.285 in) maximum diameter
2. Miniature male coaxial connector
3. FEP or PFA coated armor, armor length 300 mm (11.8 in) less than cable length (see Note 6)
4. 75Ω cable, 3.7 mm (0.15 in) maximum outside diameter, 3.94 mm (0.155 in) maximum diameter for FluidLoc cable, 7.67 mm (0.302 in) maximum outside diameter of armor, 10.2 mm (0.40 in) maximum diameter of armor ferrule
5. 7.24 mm (0.285 in) maximum diameter
6. Stainless steel ferrules, 10.2 mm (0.40 in) max diameter
7. FEP or PFA insulated triaxial cable
8. Miniature female coaxial connector
9. Cable length, +20%, -0%

Figure 17: Extension Cable without Connector Protectors

330130, 3300 XL Extension Cable (FEP Armor and Insulation)

330190, 3300 XL ETR Extension Cable (PFA Armor and Insulation)

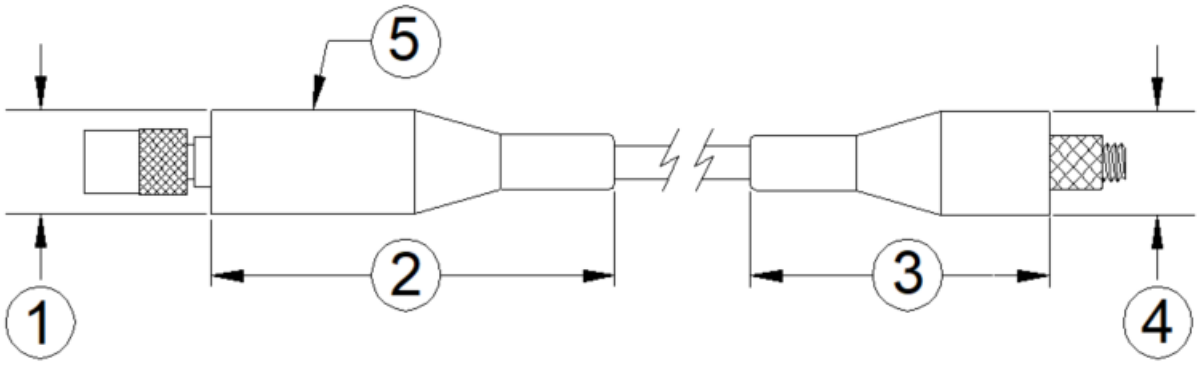

1. 12.4 mm (0.49 in) maximum diameter
2. 51.1 mm (2.01 in) maximum
3. 36.3 mm (1.43 in) maximum.
4. 12.4 mm (0.49 in) maximum diameter
5. Connector protector (fluorosilicone material) only installed on female end when optioned. Both ends available as accessories.

Figure 18: Extension Cable with Connector Protectors

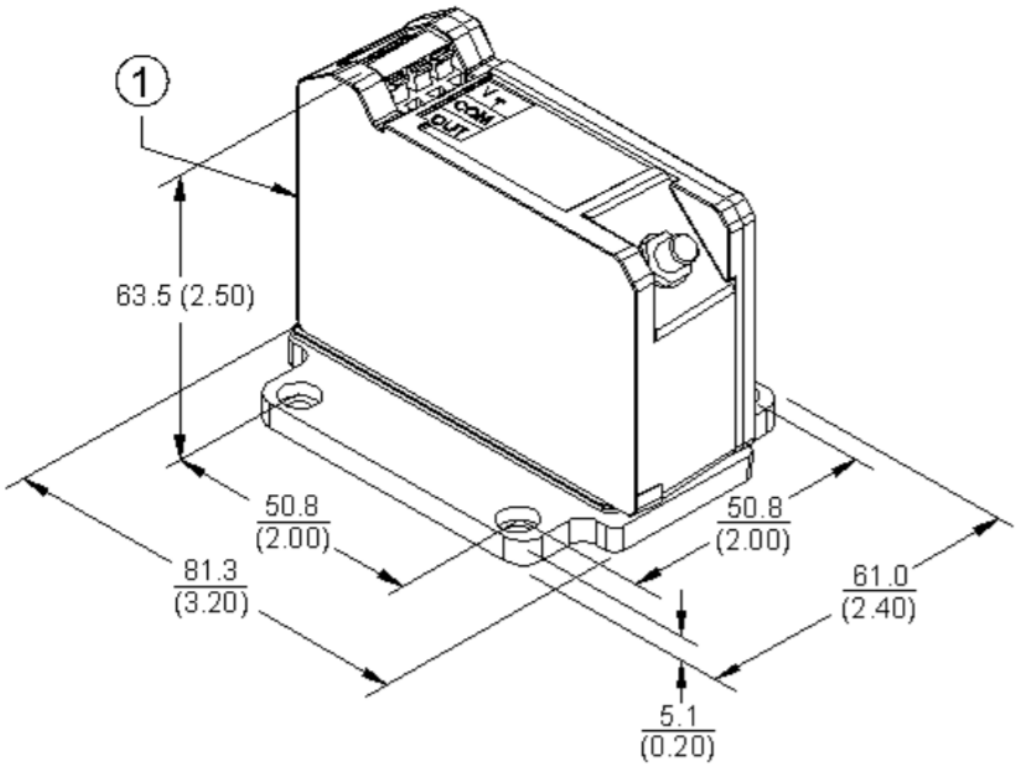

1. Mounting option “A”, Options –50 or -90

Figure 19: Panel Mount 3300 XL Proximitor Sensor

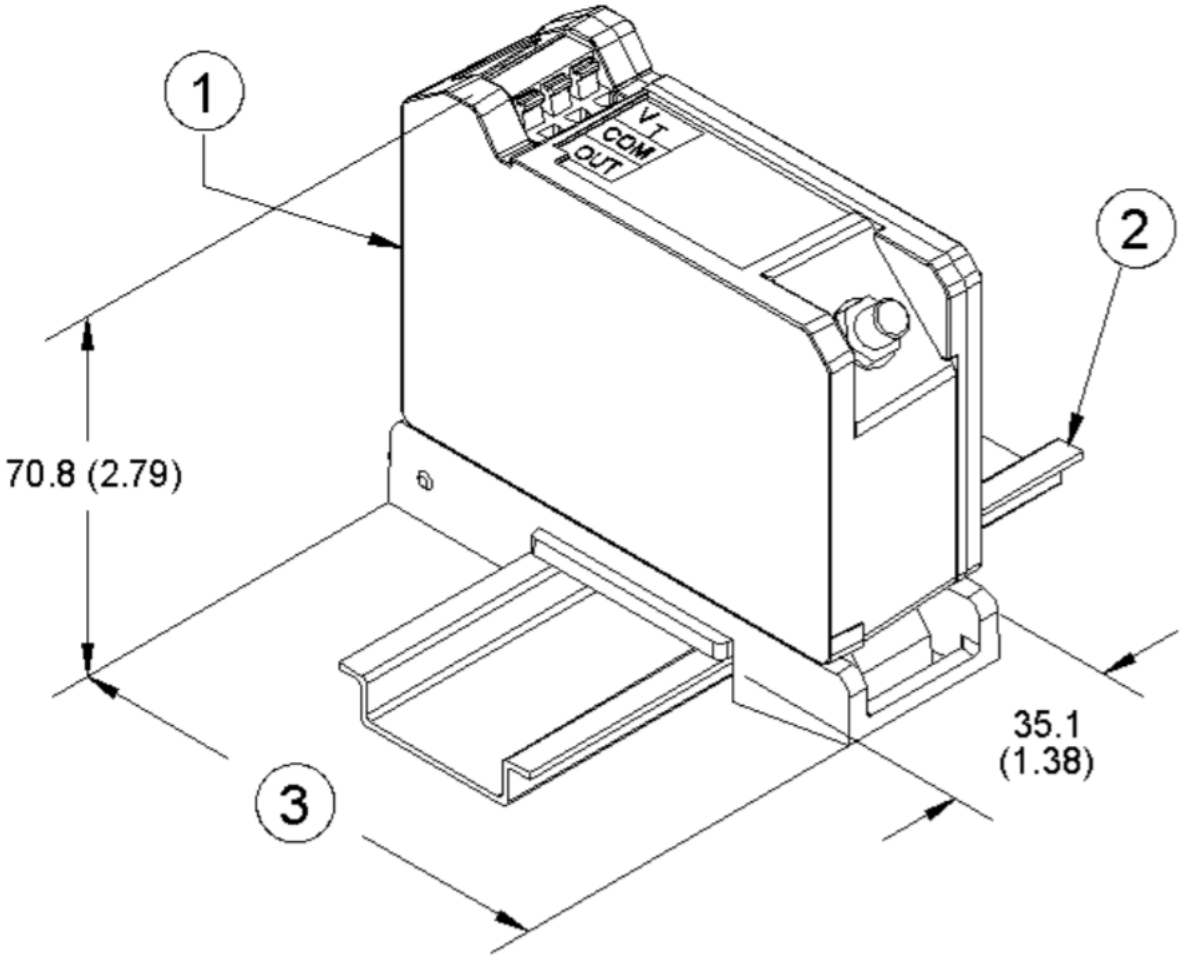

1. Mounting option “A”, Options –51 or –91
2. 35mm DIN rail (not included)
3. 89.4 mm (3.52 in). Additional 3.05 mm (0.120 in) clearance required to remove DIN rail.

Figure 20: DIN Mount 3300 XL Proximitor Sensor

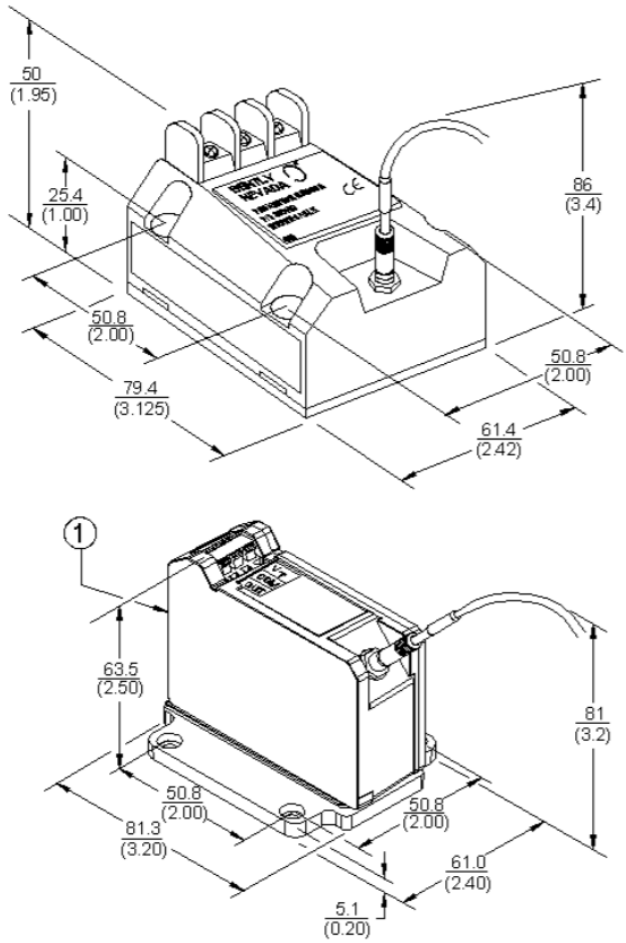

1. Mounting option "A", Options –50 or -90

Figure 21: Physical Mounting Characteristics Showing Interchangeability of 3300 and 3300 XL Proximitor Sensors when 4-hole Mounting Option Is Used[8]

Figure Notes:

1. All dimensions on figures are in millimeters (inches) unless otherwise noted.
2. Standard mount 8 mm probes supplied with M17 or 9/16 inch lock nut.
3. Probes ordered with 5 or 9 meter integral cables have a length tolerance of +20%, -0%.
4. Reverse mount probes not available with armor or connector protector options.
5. Letters inside quotation marks on figures refer to probe ordering options.
6. Stainless steel armor is supplied with FEP outer jacket for standard probes, PFA outer jacket for ETR probes.
7. FEP jacket is standard non-armored portion of the cable for standard probes, PFA jacket on non-armored portion for ETR probes.
8. Use M3.5 or #6 screws for panel-mount Proximitor Sensors (screws provided when purchasing Bently Nevada housings).

Copyright 2026 Baker Hughes Company. All rights reserved.

Bently Nevada, a Baker Hughes Company

1631 Bently Parkway South, Minden, Nevada USA 89423

https://bntechsupport.com

GLOBAL INDUSTRIAL AUTOMATION SOURCING

Ready to source this part?

Ask for availability, pricing, documentation, and delivery options.

Request a fast quote

Include the exact model, quantity, required condition, destination, and requested delivery date.

EMAIL
sales8@apterpower.com

WHATSAPP
+8615359408275

PRODUCT: 330103-00-06-10-02-00

Official Bently Nevada technical pages are preserved. Apter Power branding and inquiry details are supplemental.